allen CONCRETE EQUIPMENT

AMERICAN OWNED
AMERICAN MADE
• SINCE 1964 •

HDX600

OPERATIONS AND PARTS MANUAL

allen ENGINEERING CORPORATION®

HYDRA-DRIVE EXTREME SERIES RIDING TROWEL

ISSUE: 600-1 11/2007

048771

Riding Trowel

OPERATIONS MANUAL
PARTS BOOK

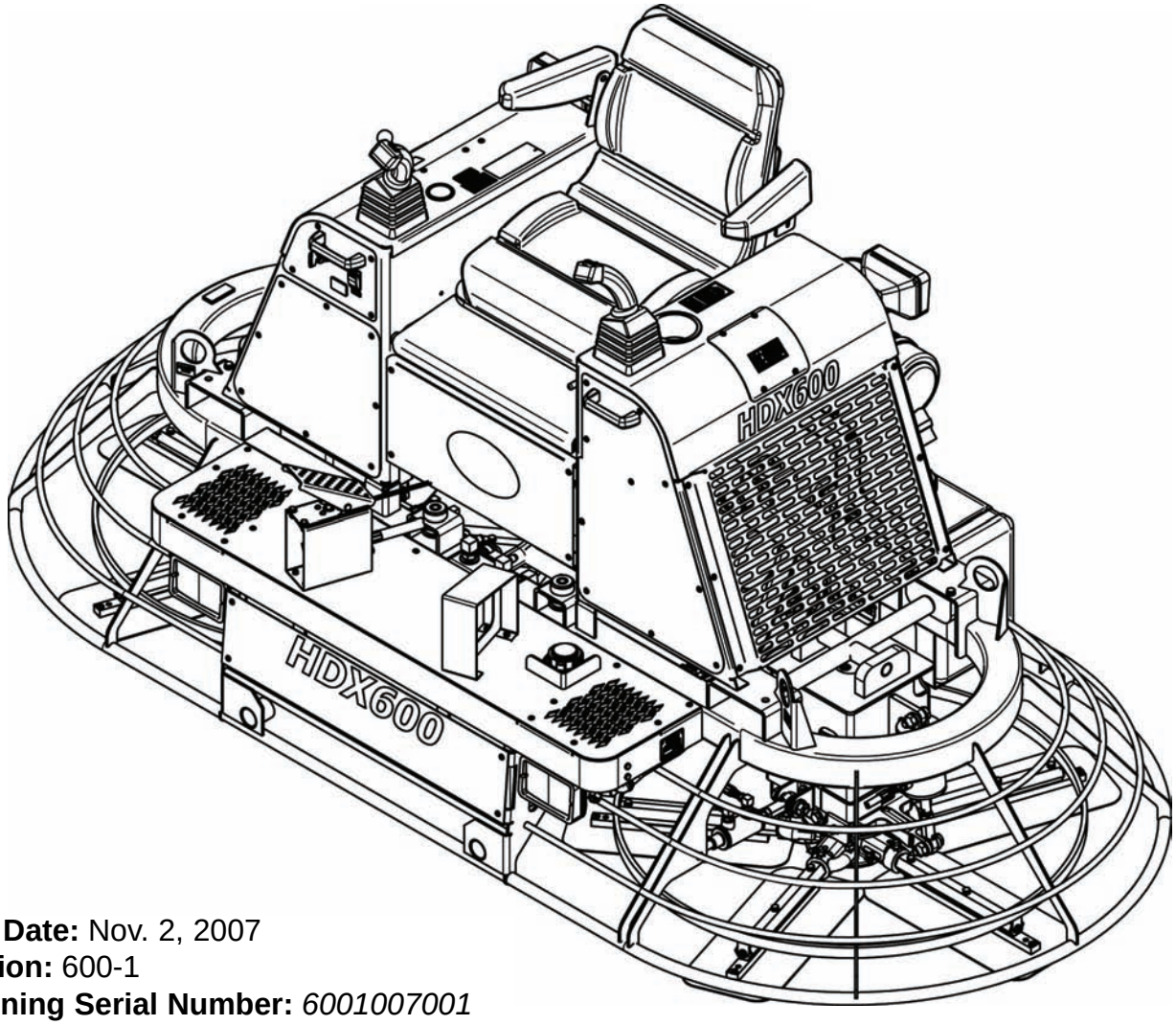

Issue Date: Nov. 2, 2007
Revision: 600-1
Beginning Serial Number: *6001007001*

THIS MANUAL COVERS RIDING TROWEL(S) BELOW

MODEL	AEC Part #
RIDER, HDX600-44KBTD	**048500**

Allen Engineering's Razorback Riding Trowels are covered under one or more of the following patent numbers: **U.S. Design Patents:** 323,510; 340,340; 344,736; 400,542; 402,998; 402,999; 403,332. **U.S. Utility Patents:** 4,298,555; 5,108,220; 5,480,257; 5,480,258; 5,613,801; 5,685,667; 5,803,658; 5,816,739; 5,890,833; 5,934,823; 6,053,660. **Canadian Patents:** 2,039,893. **French Patents:** 0293496. **German Patents:** M9007736.9 With other Patents Pending.

Printed 11/2007

LIMITED WARRANTY and LIMITATION OF LIABILITY

Allen Engineering Corporation ("Allen") warrants its products to be free of defects in material or workmanship for the following periods:

A. New Machines and Parts **One Year**

The above listed warranty periods are effective for Allen Machines with a first day of use by End User on April 1, 2007 or later. Warranty period begins on first day of use by End User. This first day of use is established by the date of a completed Allen Warranty Card or a Bill of Sale to the End User. All warranty is based on the following limited warranty terms and conditions, including the disclaimer of implied warranties and consequential damages.

1. Allen's obligation and liability under this warranty is limited to repairing or replacing parts if, after Allen's inspection, there is determined to be a defect in material or workmanship. Allen reserves the choice to repair or replace.

2. If Allen chooses to replace the part, it will be at no cost to the customer and will be made available to the Allen Distributor, Dealer, or Rental Center from whom the End User purchased the product.

3. Replacement or repair parts, installed in the product, are warranted only for the remainder of warranty period of the product as though they were the original parts.

4. Allen does not warranty engines. Engine warranty claims should be made directly to an authorized factory service center for the particular engine manufacturer.

5. Allen's warranty does not cover the normal maintenance of products or its components (such as engine tune-ups and oil & filter changes). The warranty also does not cover normal wear and tear items (such as belts and consumables).

6. Allen's warranty will be void if it is determined that the defect resulted from operator abuse, failure to perform normal maintenance on the product, modification to product, alterations or repairs made to the product without the written approval of Allen. Allen specifically excludes from warranty any damage to any trowels resulting from an impact to the rotors.

7. Impact damage is not covered under the Allen Gear Box warranty.

8. Allen will pay shop labor on warranty items at the Allen Shop Labor Rate in existence on the date of the warranty claim. An Allen Labor Chart will determine the time allowed to complete a repair and will govern the shop labor hours that will be allowed.

9. Allen will pay freight on warranty replacement parts at worldwide standard ground rates. No warranty replacement parts will be shipped air freight at the expense of Allen. Allen only pays outbound freight charges when sending warranty replacement parts to the customer via ground service. Allen does not pay any inbound freight. However, if Allen determines this to be a warranted item, only then will Allen reimburse the customer for inbound freight at standard ground rates.

10. ALLEN ENGINEERING CORPORATION'S WARRANTY POLICY WILL NOT COVER THE FOLLOWING: TAXES; SHOP SUPPLIES; ENVIRONMENTAL SURCHARGES; AIR FREIGHT; TRAVEL TIME; LOSS OF TIME; INCONVENIENCE; LOSS OF RENTAL REVENUE; RENTAL COSTS OF EQUIPMENT USED TO REPLACE THE PRODUCT BEING REPAIRED; LOSS OF USE OF THE PRODUCT; COMMERCIAL LOSS; OR ANY OTHER CHARGES WHATSOEVER OR ANY LIABILITIES FOR DIRECT, INCIDENTAL, OR CONSEQUENTIAL DAMAGE OR DELAY.

11. ALLEN ENGINEERING CORPORATION MAKES NO OTHER WARRANTY, EXPRESSED OR IMPLIED. THIS LIMITED WARRANTY IS IN LIEU OF THE WARRANTY OF MERCHANTABILITY AND FITNESS. THERE ARE NO OTHER WARRANTIES THAT EXTEND BEYOND THE DESCRIPTION ON THIS DOCUMENT.

12. No Allen employee or representative is authorized to change this warranty in any way or grant any other warranty unless such change is made in writing and signed by an officer of Allen Engineering Corporation.

© Allen Engineering Corporation Revised 4/1/07

OPERATIONS
IDENTIFICATION PLATE

An identification plate listing the Model Number and Serial Number is attached to each unit and is located on the right side of the mainframe. The identification plate is located on the left step deck.

Please record the information found on this plate below so it will be available should the identification plate become lost or damaged . When ordering parts or requesting service information you will required to specify the model number and serial number of the unit.

Model Number
HDX600-44KBTD

- **TURBO DIESEL**
- **ENGINE** 44 HP Kubota
- **HYDRA-DRIVE** 600 Series

Serial Number

The serial number found on the identification plate is a six digit number. The model number identifies your machine and will ensure that you receive the correct replacement parts.

SAMPLE: **6001007001**

- **Sequence #**
- **Year**
- **Month**
- **Model**

Serial # Location

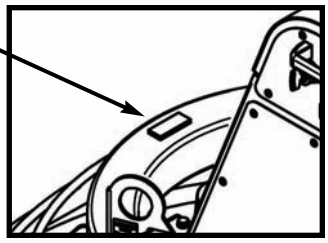

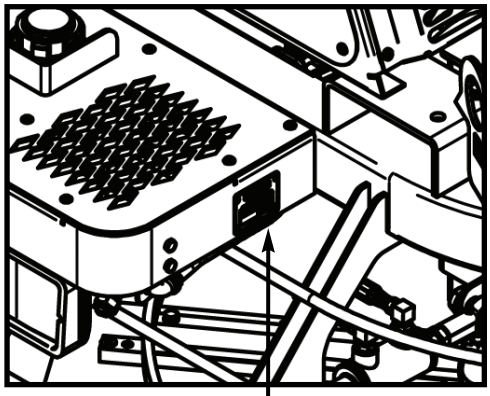

Identification Plate Location

FILL IN FOR FUTURE REFERENCES

Model Number:_____

Serial Number:_____

Date Purchased:_____

Purchased From:_____

_____

HDX600-44KBTD Operating Information

TABLE OF CONTENTS

1.1 Safety Note 1A-6
1.2 Operating Safety 1A-6
1.3 Service Safety 1A-7
1.4 Dimensions 1A-7
1.5 Technical Data 1A-8
1.6 Description 1A-9
1.7 Before Starting 1A-9
1.8 Starting 1A-9
1.9 Operating 1A-10
1.10 Stopping 1A-10
1.11 Steering 1A-11
1.12 Pitch Adjustment 1A-11
1.13 Periodic Maintenance Schedule 1A-12
1.14 Control Linkage Lubrication 1A-12
1.15 Lift Lever Adjustment 1A-13
1.16 Transporting Trowels 1A-14
1.17 Battery Jump Start Procedures 1A-15
1.18 Greasing Thrust Bearing 1A-15
1.19 Hydraulic Preventive Maintenance 1A-16
1.20 Caution Decals 1A-17
1.21 CE Marking 1A-18

This machine is built with user safety in mind. However, it can present hazards if improperly operated and serviced. Follow operating instructions carefully!

If you have any questions about operating or servicing this equipment please contact your Allen Engineering Dealer or Allen Engineering Customer Service at 800-643-0095 or 870-236-7751.

Important Reminder

Complete any warranty requirements as specified by the engine manufacturer in their instructions found inside the manual tube located on the right side rear cover plate.

Your engine is not manufactured by Allen Engineering , and therefore is not covered under Allen Engineering warranty.

Your engine manufacturer should be contacted if you wish to purchase a parts manual or a repair manual for your engine.

Refer to enclosed owners engine manual for complete O&M instructions. See your battery manufacturer for battery warranty.

Your Allen Dealer

Your Dealer has Allen Engineering trained mechanics and original Allen Engineering replacement parts. Always contact the Allen Engineering Dealer who sold you this machine for Allen Engineering Certified repairs and replacement parts.

Place dealer information here for future reference.

DEALER NAME:_____**PHONE #:**_____-_____

ADDRESS:_____

CITY:_____**STATE:**_____**ZIP:**_____

SALESMAN:_____

ADDITIONAL INFORMATION:_____

_____

_____

_____

_____

_____

THE INFORMATION CONTAINED IN THIS MANUAL WAS BASED UPON THE MACHINES IN PRODUCTION AT THE TIME (BEGINNING WITH SERIAL NUMBER ***6001007001***) OF PUBLICATION. ALLEN ENGINEERING CORPORATION RESERVES THE RIGHT TO CHANGE ANY PORTION OF THIS DOCUMENT WITHOUT NOTIFICATION.

Information Contained in This Manual

This manual provides information and procedures to safely operate and maintain the Allen® HDX600-44KBTD Model Riding Trowel.

For your own safety and protection from personal injury carefully read, understand and observe the safety instructions described in this manual.

Always operate and maintain this machine in accordance with the instructions described in this manual. A well maintained piece of equipment will provide many years of trouble free operation. This manual is divided into the sections listed below.

1A OPERATIONS

2A PARTS

Ordering Parts

This manual contains an illustrated parts list for help in ordering replacement parts for your machine. Follow the instructions listed below when ordering parts to ensure prompt and accurate delivery. All orders for parts must be made through your local authorized Allen Engineering dealer. All authorized Allen Engineering dealers must fax a copy of the parts order to customer service. The fax number is (870-236-3934). Facsimile orders must contain the following information:

1. On all orders for service parts include SERIAL NUMBER and MODEL number.

2. Shipment may be delayed if this information is not included.

3. Include correct description and part number from part section 2A.

4. **State exact shipping instructions including preferred routing and complete destination address. Also please indicate your preferred freight carrier. If no freight carrier is indicated Allen Engineering reserves the right to ship the shipment the best way possible. Once a shipment leaves Allen Engineering's docks it becomes the responsibility of the freight carrier to insure that it arrives at it's intended destination.**

5. **DO NOT** return parts to Allen Engineering without receiving written authorized Customer Service Report(CSR) from Allen Engineering. All authorized returns must bee shipped prepaid. **All unauthorized returns will be shipped back to the addressee at their expense.**

Keep this manual or a copy of it with the machine. If you loose this manual or need an additional copy please contact your Allen distributor or Allen Engineering Corporation at (800) 643-0095 and order literature part number 048771.

© 2007 Allen Engineering Corp.
All Rights Reserved -- Contents Subject to Change Without Prior Notice.

1.1 Safety Notes

This manual contains NOTES, CAUTIONS and WARNINGS which must be followed to reduce the possibility of improper service damage to the equipment or personal injury. Read and follow all NOTES, CAUTIONS and WARNINGS included in this manual.

NOTE Contains additional information important to a procedure.

CAUTION Provides information important to prevent errors which could damage machine or components.

WARNING Warns of conditions or practices which could lead to personal injury or death.

1.2 Operating Safety

Familiarity and proper training are required for the safe operation of this equipment! Equipment operated improperly or by untrained personnel can be dangerous! Read the operating instructions contained in both this manual and the engine manual and familiarize yourself with the location and proper use of all controls.

Safety Precautions

1. Read operating and safety instructions before using the Riding Trowel. Operate the machine in accordance with the manufacturer's instructions.
2. Inspect your Riding Trowel for damage or tampering that can sometimes occur during shipping.
3. **If damage is found file a claim with your carrier immediately! Mark freight bill of lading as damaged shipment.**
4. Do not operate Riding Trowel if any guards have been removed or if the "safety switch" is not operational.
5. Only trained personnel should be allowed to operate your Riding Trowel.
6. Never allow more than one person on the Riding Trowel while it is in operation.
7. No foreign objects such as buckets, tools or materials should ever be attached or allowed to ride on the Trowel during operation.
8. Do not attempt to fill fuel tank or oil sump while the engine is running. Allow engine to cool before refueling.
9. Never attempt to operate the Riding Trowel on inclined surfaces.
10. Do not use over the counter hardware to replace manufacturer's hardware.
11. **WARNING: When operating machines with gas and diesel engines in confined areas. The fumes <u>MUST</u> be ventilated!**
12. Always wear safety goggles, ear protection, and gloves when operating the Riding Trowel.

1.3 Service Safety

Poorly maintained equipment can become a safety hazard! In order for the equipment to operate safely and properly over a long period of time, periodic maintenance and occasional repairs are necessary.

DO NOT attempt to clean or service machine while it is running. Rotating parts can cause severe injury.
DO NOT use gasoline or other types of fuels or flammable solvents to clean parts especially in enclosed areas. Fumes from fuels and solvents can become explosive and can be hazardous to your health.
ALWAYS operate machine with all safety devices and guards in place and in working order.
ALWAYS keep area around muffler free of debris such as leaves, paper, cartons, etc. A hot muffler could ignite such items starting a fire.
ALWAYS replace worn or damaged components with spare parts designed and recommended by ALLEN ENGINEERING.
ALWAYS remove key and disconnect battery on machines before servicing to avoid accidental start-up.

1.4 Dimensions

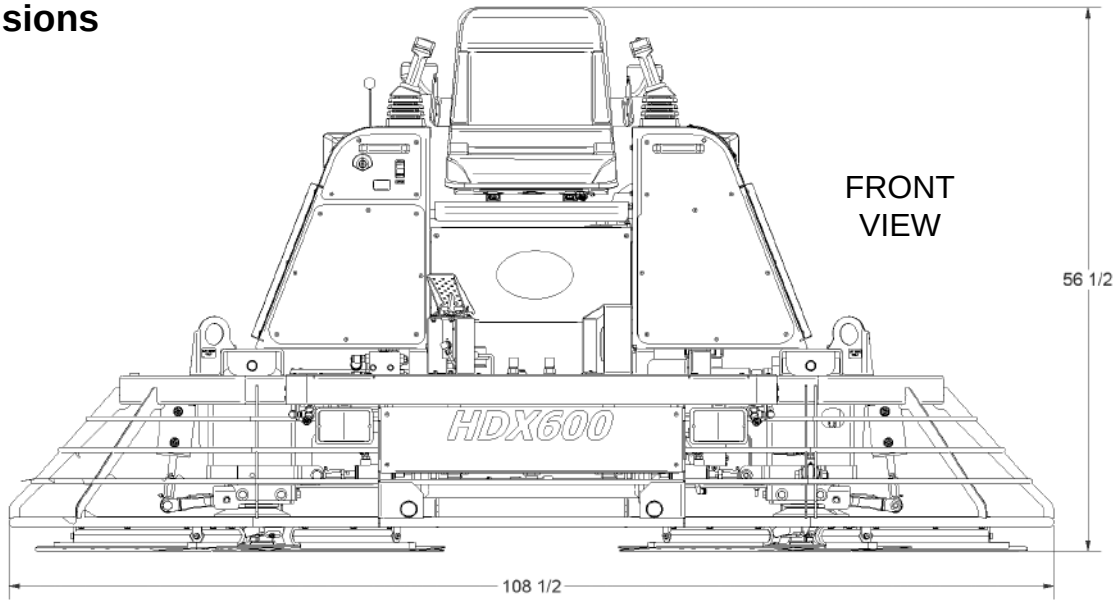

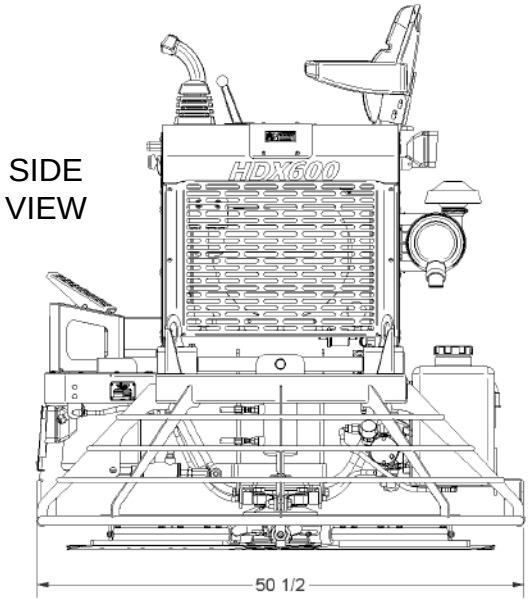

1.5 Technical Data

HYDRA-DRIVE MODEL	***HDX600-44KBTD***
Dimensions (LxWxH)	108-1/2” (275.6cm) x 50-1/2” (128.3cm) x 56-1/2” (143.5cm)
Panning Path Width	100” (254cm)
Two Rotors (diameter)	46” (1,168.4 mm) 5-Bladed
Maximum Rotor Speed (RPM)	135
Weight	1,613 lbs. (732kg)
Ten Flat Finish Blades	8” x 18” Finish
Hydra-Drive Rotor Motor (2)	G-Roller Stator Motors
Hydra-Drive Hook-Ups (2)	Part of Rotor Motor
Hydra-Drive Pump System (2)	Variable Displacement, Axial Piston Pump
Hydra-Drive Fluid Cooling System	Air/Oil Fan Cooled Heat Exchanger
Hydra-Drive Filtering System	Inline Suction, Return, Charge
Hydra-Drive Rotor Speed Control	Foot Pedal Pilot Control
Engine Speed Control	Lever Style (Self Locking)
Guard Rings	Attached
Operator Control Panel	Multi-gauge
Power Retardant Spray System/Capacity	Pump Powered Two Nozzles / 6 gal. (22.7L)
Steering Control System	Proportional Hydraulic Pilot Control w/ Zero Position Neutral
Pitch Control	Two Push Button Electro-Hydraulic System Joy Stick Mounted
Battery	12 Volt, 525 Cold Cranking Amps
Safety Shutdown Switch	Foot Pedal/Seat Electronic Switch Control
Hydraulic Fluid Capacity	8 gal. (30.2L)
Fuel Capacity	12 gal. (45.4L)
Approx. Running Time Between Fueling	4 Hours
Engine Hour and RPM Meter	Digital
Oil Pressure	Light
Engine Temperature	Light
Alternator Engine Mounted	40 Amps
Lights	Four(4) - 50 Watt
Amperage	40 Amps
Nylon Strap Lifting Bridle	Standard
ENGINE: Kubota (KB) (liquid-cooled)	44 HP (33kw) @ 3,000 RPM
Engine Weight	251.3 lbs (114kg)
OPTIONAL FEATURES:	
OPTIONAL ACCESSORIES:	
Sun Screen Umbrella	Recommended
Trowel Cover	Recommended
Dolly Jacks	HDX600 Series Recommended
Riding Trowel Trailer	6’ x 12’ Recommended
Two Pans	Universal 5-Blade
Trowel Arm Jig	Available
Spider Pulling Tool	Available

Engine Make & Model		**Kubota 44HP V1505-TD**
Gross Intermittent output	kW(HP)/rpm	33.0(44.2)/3,000
Net Continuous output	kW(HP)/rpm	27.2(36.5)/3,000
Fuel and type	Diesel, No. 2-D (ASTM D975)	
Cylinder arrangement	1-2-3	
Bore x Stroke	mm x mm	74 x 78.4
Total piston displacement	cc	1,498
Compression ratio		22.5:1
Length x width x height (standard model)	mm	591.3 x 439.2 x 631.3
Dry weight (standard model)	kg/lb	114/251.3

1.6 Description

The Riding Trowel is a modern high production machine. Finishing rate will vary depending on the operators skill and job conditions. This Riding Trowel has ten finishing blades. The *Hydra-Drive Rotor Motors* are designed to provide exceptional performance with low maintenance and trouble free use under some of the worse conditions. All Allen® Riders are equipped with a safety shutdown switch for added job safety. Operating time between fuel refills is approximately 4 hours with a rotor speed of 135 RPM for the HDX600. The Hydra-Drive Series Riders are the most technically advanced trowels on the market today. With proper maintenance and use your riding trowel will provide you with exceptional service.

1.7 Before Starting

Before starting trowel check the following:

* Oil level in engine:
* Hydraulic oil level:
* Fuel level :
* All fasteners:
* Condition of trowel arms and blades:
* Grease trowel daily:
* All hydraulic hoses and fittings:
* All linkages (fulcrums, etc.):
* Engine Coolant

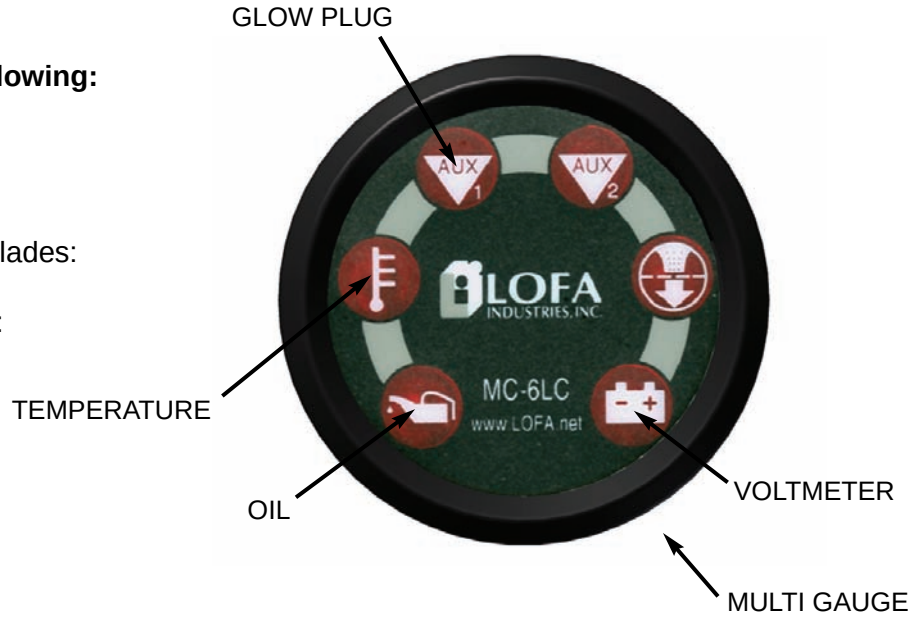

1.8 Starting

Before starting trowel be aware of all the locations and identification of controls.

1. Sit down correctly on the Riding Trowel Seat. DO NOT attempt to start the Riding Trowel with out an operator in the seat.

2. Turn key counter-clockwise until the glow plug light goes off then clockwise until the engine engages and starts

3. Turn key to the run position and allow spring back. Allow engine and hydraulics to warm up before operating trowel.

Caution: Operating the starter for more than 5 seconds can damage the starter or engine. If engine fails to start release the switch and wait 10 seconds before operating starter again.

1.9 Operating

To utilize your Allen® Rider to its fullest capacity the machine should be driven in the direction the operator is facing. This will finish the widest possible area while giving the operator an excellent view of the slab surface about to be troweled. When the machine reaches the end of the slab make a 180 degree turn and repeat the straight line of direction to the other end of the slab. To familiarize a new operator with the Riding Trowel the following steps should be taken.

1. Point out the location of all operation components

   A. right pitch control (see illustration on next page)
   B. left control lever (forward reverse)
   C. right control lever (left & right, forward &reverse)
   D. left pitch control (see illustration on next page)
   E. right foot pedal (rotor control)
   F. left foot rest
   G. seat adjustment
   H. fuel gauge
   I. engine throttle lever
   J. engine coolant level

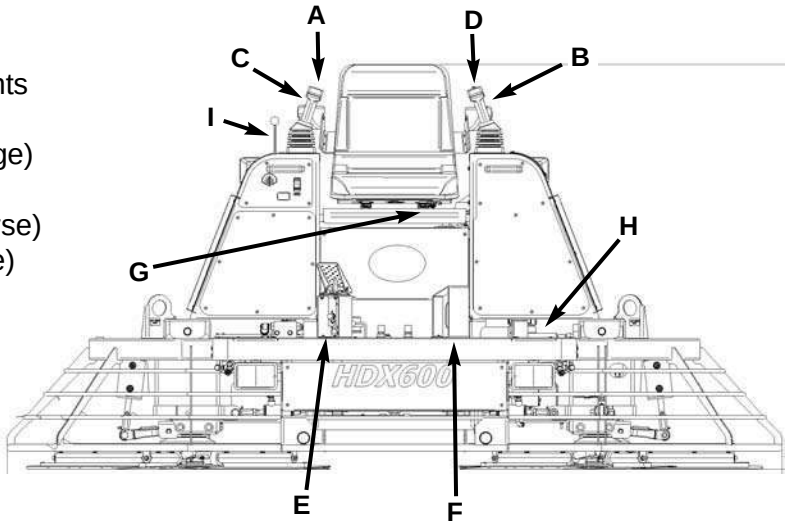

2. With the operator in the seat, show him the functions of the control levers (B) and (C) and how to start the machine. (refer to page 1A-9).

A hard level concrete slab with a little water on the surface is an ideal place for an operator to practice with the machine. For practice, pitch the blades up approximately 1/4" on the leading edge. Start by making the machine hover in one spot and then practice driving the machine in a straight line and making 180 degree turns. Best control is achieved at full RPM.

CAUTION: After starting engine, engage the throttle either 1/2 or fully. This allows the engine and the hydraulic fluid to warm up faster. NOTE: If you start out at a low RPM this will cause the machine to have a slower response time between movement of the joysticks and the rotors.

CAUTION: DO NOT use excessive pressure on the joysticks. Excessive pressure does not increase the reaction time of the machine and can damage steering controls.

1.10 Stopping

To stop the trowel's movement, allow the control levers (C) and (B) to return to their neutral position and release pressure on the right foot pedal (E). You will need to push the engine throttle lever (I) towards the front of the machine. This will reduce the speed of the engine. It is not recommended to leave the engine throttle lever in the rear position if the rotors are not turning.

1.11 Steering

A slight "feathering motion" forward and backward with the left joystick is required to move the machine in a straight path to the left or right while operating the right hand joystick. See illustration.

1> forward
2> reverse
3> rotate clockwise
4> rotate counter clockwise
5> left sideways
6> right sideways

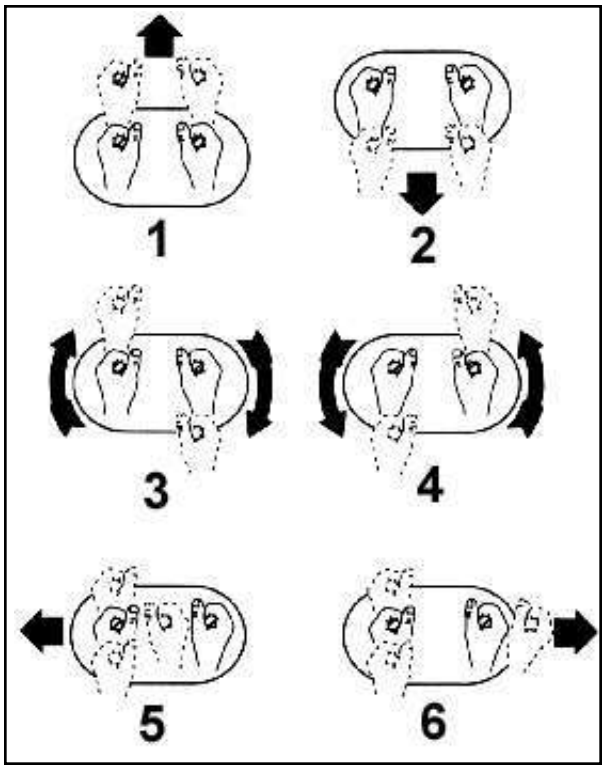

1.12 Pitch Adjustment

Different pitch angles are needed as you work the different stages of the concrete. See the drawing below. When changing or setting pitch (angle of trowel blades), set the desired degree of pitch on the left side of the machine and then adjust the right side to match.

To increase the pitch, press the pitch control button (a) which is located on top of joystick towards the inside. To decrease the pitch, press the pitch control button (b) which is located on top of joystick towards the outside.

Left Pitch Adjustment

Right Pitch Adjustment

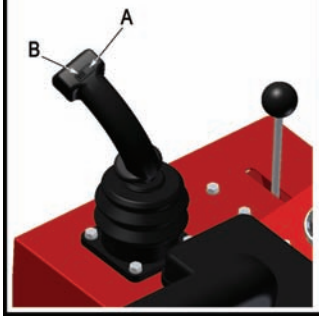

Working Conditions of Concrete	Suggested Working Pitch
Stage 1: Wet surface working stage	0°
Stage 2: Wet plastic working stage	5°
Stage 3: Plastic working stage	10°
Stage 4: Semi-hard working stage	15°
Stage 5: Hard finishing stage (Burnishing)	20°

1.13 Periodic Maintenance Schedule

The chart below list basic trowel and engine maintenance. Refer to engine manufacturer's Operation Manual for additional information on engine maintenance. A copy of the engine Operator's Manual was supplied with the machine when it was shipped. To service the engine, remove the front and rear access panels.

	Daily	Every 20 Hours	Every 50 Hours	Every 100 Hours
Grease Trowel Arms	X			
Check Fuel and Coolant Levels	X			
Inspect Air Filters Replace as Needed	X			
Check and Tighten External Hardware	X			
Grease Thrust Bearings	X			
Check Hydraulic Oil/Filter Refer to Page 1A-19	X			
Grease Control Linkage		X		
Check Valve Clearance			X	
Change Engine Oil				X
Replace Oil Filters				X

1.14 Control Linkage Lubrication

The control linkage is equipped with several grease fitting to lubricate pivot points. Grease control linkage once a week or every 20 hours to prevent wear and ensure free movement and smooth response of control levers. Use a general purpose grease and add one to two shots of grease to each fitting.

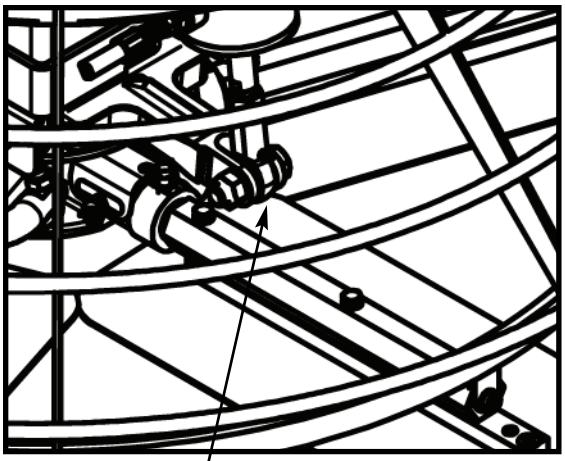

Example

1.15 Lift Lever Adjustment

Damage to or replacement of a trowel arm can change the adjustment of the lift lever. This can unbalance the trowel arms and cause the trowel to wobble during operation. To operate smoothly the lift lever on all arms must be adjusted the same to ensure that the trowel is balanced correctly. Adjust trowel arms using optional trowel arm jig as described below.

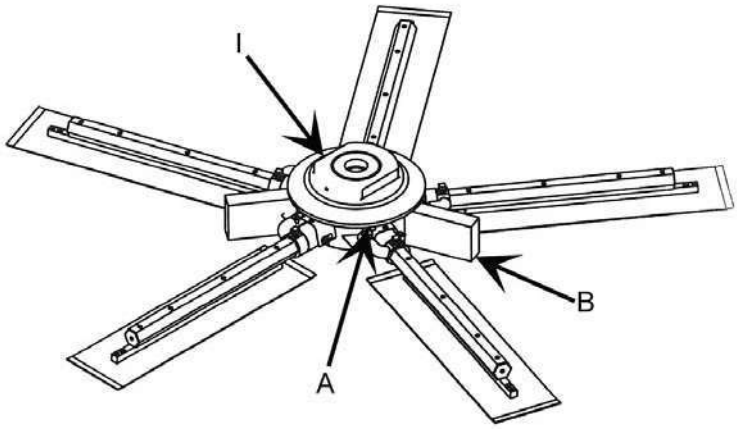

NOTE: Make sure that there is no pitch in the blades before attempting to remove a trowel arm.

1. Block up pressure plate (I) using wooden blocks (B).

2. Remove stabilizer ring from spider assembly (only on available models).

3. Remove blades from trowel arms.

4. Loosen hex head cap screw (A) and remove it and the external star washer from the spider boss.

5. Remove trowel arms from spider 5-boss with lift levers in place.

6. Clean flats on trowel arm before placing it in the trowel arm jig (PART# 016863).

7. For HDX600 series trowels use the medium spacer (1-1/4 X 2-1/2) (D).

8. Insert trowel arm into trowel arm jig as shown.

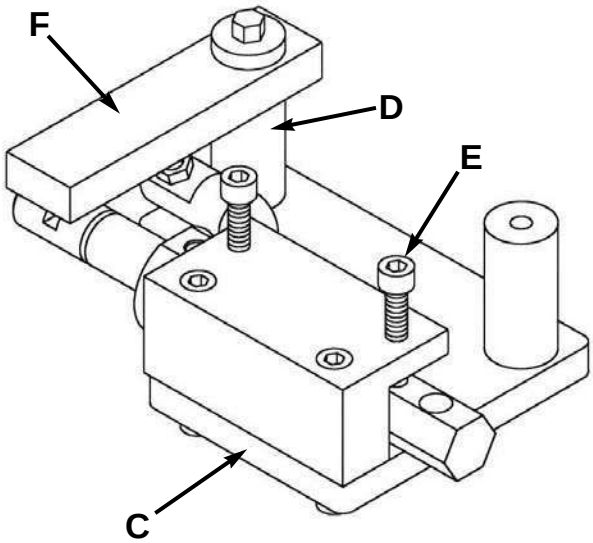

9. Tighten socket head bolts (E) down on the trowel arm to hold in place.

10. Place carriage bolts (G) on lift lever under the trowel arm jig (F) as shown.

11. Loosen jam nut (H) and adjust the carriage bolt so that the top of the bolt is just touching the bottom of the trowel arm jig and tighten jam nut (H).

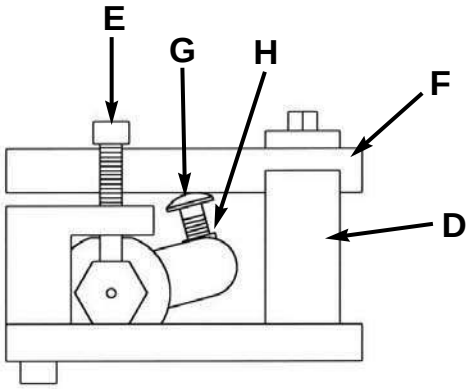

12. Attach trowel arm to spider boss and blades to arms.

13. Tighten down hex head cap screw to secure arm in place.

14. Reattach stabilizer ring (only on available models).

1.16 Transporting Trowel

Optional dolly jacks are available for short moves or to aid in servicing the trowel. Install dolly jacks as follows:

1. Inspect dolly jack (L) for serviceability and damage.

2. Place riding trowel on firm level ground.

3. Fully insert the extension tubes in the holes (K) in the mainframe of the riding trowel.

4. Turn jack handles clockwise to lift trowels and counter-clockwise to lower trowel.

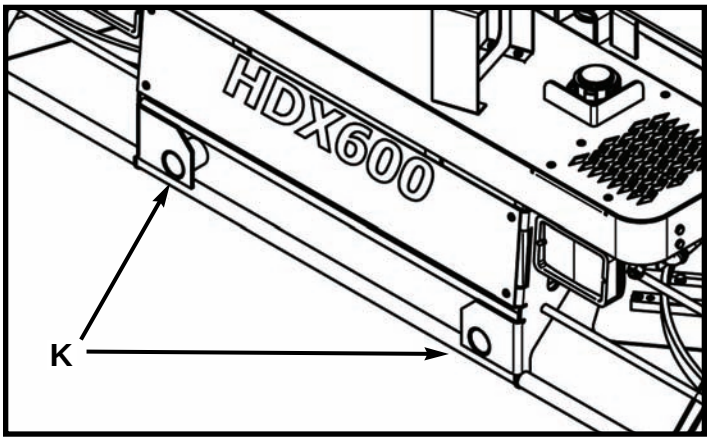

CAUTION:

The dolly jack lifting system is designed for short moves and to aid in servicing the trowel. It is not a substitute for a towing system or trailer. An optional lifting bridle (M) is available and recommended for lifting the trowel. Attach the bridle to each of the four lifting eyes (N) on the trowel.

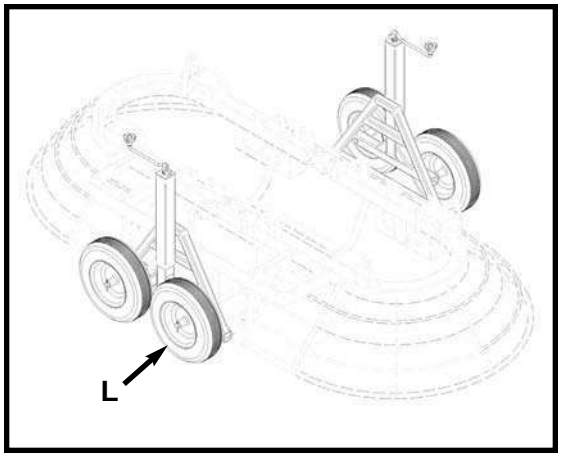

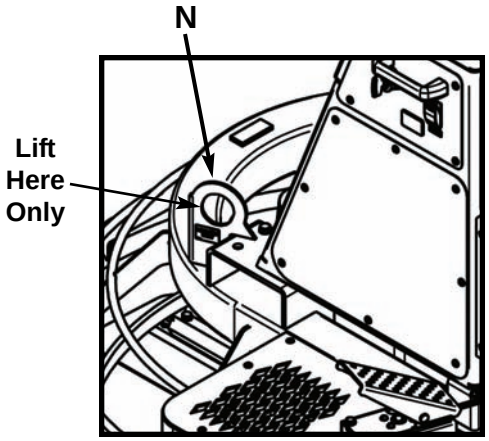

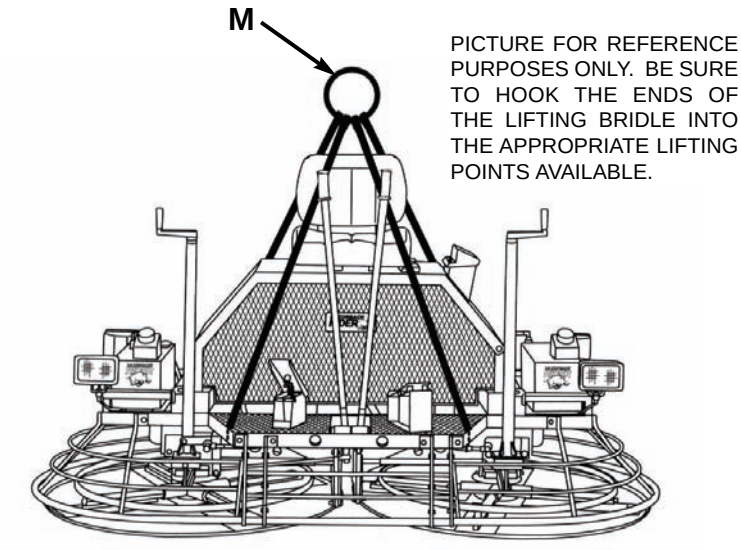

1.17 Battery Jump Start Procedure

Occasionally it may be necessary to jump start a weak battery. If jump starting is necessary the following procedure is recommended to prevent starter damage, battery damage, and personal injury.

Warning: Jump starting a battery incorrectly can cause the battery to explode resulting in severe personal injury or death. Do not smoke or allow any ignition sources near the battery and do not jump start a frozen battery.

Warning: Electrical arcing can cause severe personal injury. Do not allow positive and negative cable ends to touch.

1. Use a battery of the same voltage (12V) as is used with your engine.
2. Attach one end of the positive booster cable (red) to the positive (+) terminal of the booster battery. Attach the other end of the terminal of your engine battery.
3. Attach one end of the negative booster cable (black) to the negative (-) terminal on the booster. Attach the other end of the negative cable to your engine battery.
4. Jump starting in any other manner may result in damage to the battery or the electrical system.

Caution: Over cranking the engine can cause starter damage. Allow 10 seconds for starter to cool if engaged for more than 5 seconds.

Caution: When using lights or high amperage draw accessories, idle the engine for a period of 20 minutes to bring the battery to charge state.

1.18 Greasing Thrust Bearing

Step 1: Remove red plastic caps covering fittings.

Step 2: Properly seat grease nozzle on grease fitting (C).
.
Step 3: Add grease to pressure plate cap (A) and the pressure plate (B).

Step 4: Add grease <u>everyday</u> of operation.

<u>NOTE:</u> It is imperative that this bearing be re-greased after every clean -up especially if you use a high pressure washer.If this is not done on a daily basis, you will increase the chance of mechanical failure. Any failures due to lack of grease in the thrust bearing will not be covered under warranty.

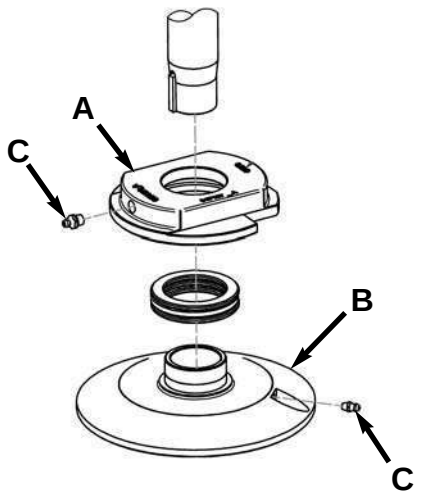

1.19 Hydraulic Preventive Maintenance

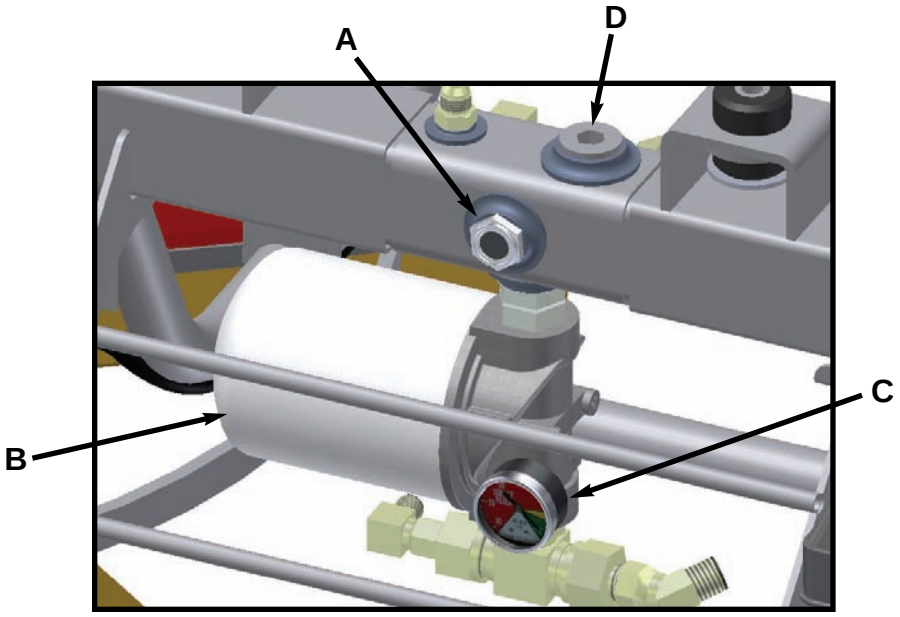

1. On a daily basis, check for leaks around all hydraulic fittings. Tighten if necessary.

2. On a daily basis, check hydraulic hoses for any wear that might occur during operations.

3. On a daily basis, visually inspect for scoring on cylinder rod ends.

3. On a daily basis, check the hydraulic fluid level on the sight gauge (A). If you can see that the oil is not all the way to the top of the sight glass, then you will need add more hydraulic fluid using ISO 68 DTE26 hydraulic fluid . If temperature of hydraulic oil rises above 160 degrees, check to make sure the hydraulic oil is full. Also check to make sure that no damage is done to the cooler or any other hydraulic components. If the problem still persist then contact Allen Engineering Customer Service.

4. On a daily basis, check the gauge - 046242 (C) located on the hydraulic filter (B). If the needle on the gauge reaches 20 PSIG or is in the red, then the oil filter is dirty and needs to be replaced. Replace with Filter part number *048670* only. ***NOTE: Failure to use Allen Engineering replacement filters will void all hydraulic warranties.***

Steps for Replacing Filter:

> Remove and replace the filter - 048670 (B). **NOTE: It is a common practice when replacing oil filters to replace the hydraulic oil as well.**

> Tighten snug to ensure that the o-ring is properly seated.

Note: If you do not experience any problems with the filter, it is a good practice to replace the filter every 100 hours of operation. However, it is mandatory that the filter and hydraulic oil are replaced after the initial 50 hours of operation. This is the “break-in” time for all the hydraulic components and new oil needs to be replaced at this time. The ISO cleanliness specification must meet the following: ***17-15-13*** Put oil in the fill port (D).

5. On a yearly basis, grease joystick mechanisms. Also check for tears and cracks in the rubber boots.

1.20 Safety Labels and Identification

Familiarity and proper training are required for the safe operation of this equipment! Safety labels are located in strategic places in plain sight for your protection. Note where they are located and adhere to them or else serious injury can occur.

This decal is located next to the throttle lever on the right side of the seat frame.

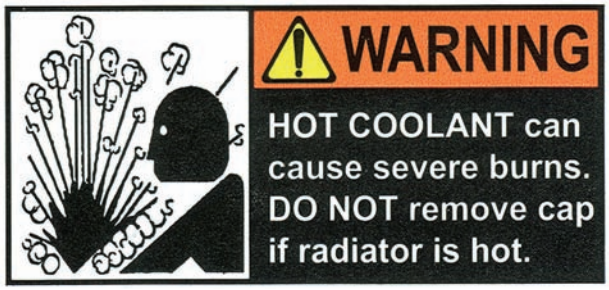

This decal is located on the access panel for the radiator.

This decal is located next to the throttle lever on the right side of the seat frame.

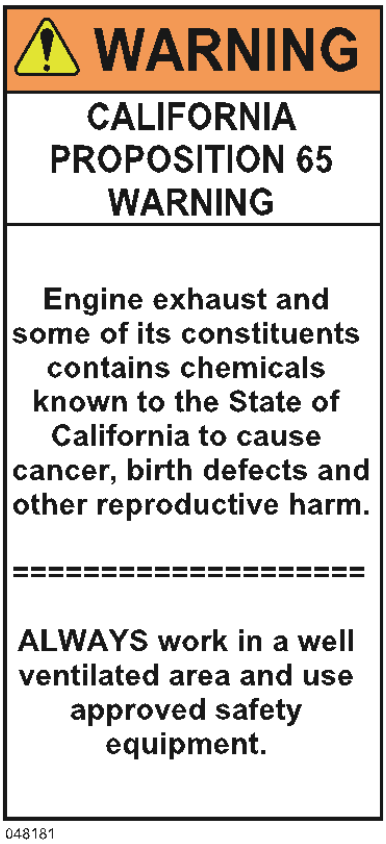

This decal is located next to the control lever on the left side of the seat frame.

NOTE: Please review the assembly drawings in Section 2A of this manual for additional decal locations.

1.21 CE Marking

Certified European testing was completed at the Allen Engineering Corporation facility on Nov. 2, 2007. During the test the following data was collected and is on file at AEC under test number *SND07-11001*.

Data Summary of Sound & Vibration Testing for CE Marking							
Test Machine	**Engine Type**	**Avg. Sound Pressure Level (SPL)**	**Operator Ear SPL**		**Seat Vibration Overall**	**Foot Vibration Overall**	**Hand Vibration Maximum**
		dB(A)	**dB(A)**		**m/sec**	**m/sec**	**m/sec**
HDX600	44 hp Kubota	88.5	90.9		107.9	80.3	45.4

Parts and Assembly Information

TABLE OF CONTENTS

2.1 Hydraulic Schematic . . . . . .
2.2 Electrical Schematics . . . . . .
2.3 Mainframe Assembly . . . . . .
2.4 Seat Frame Assembly . . . . . .
2.5 Left Rotor Assembly . . . . . .
2.6 Right Rotor Assembly . . . . . .
2.7 Power Unit Assembly . . . . . .
2.8 Dolly Jack Assembly and Accessories . . . . . .

This machine is built with user safety in mind. However, it can present hazards if improperly operated and serviced. Follow operating instructions carefully!

If you have any questions about operating or servicing this equipment please contact your Allen Engineering Distributor or Allen Engineering Corp. Customer Service at 800-643-0095 or 870-236-7751.

HDX600 Hydraulic Schematic

ITEM	PART #	DESCRIPTION	QTY
1	046731	SLW-CL-12SAE SITE DOME (#12 SAE)	1
2	048657	SP,1211 "X" FACTOR HIGH PRESSURE MANIFOLD #2	1
3	048654	800450C89B5A0AAA LEFT HAND MOTOR WITH RIGHT HAND THREADS	1
4	048655	800450C89B4A0AAAA RIGHT HAND MOTOR WITH LEFT HAND THREADS	1
5	046238	C-20 AIR-OIL COOLER	1
6	048663	503-179-0025 TANDEM PISTON PUMP	1
7	048658	PLP10,4SO-C9W7-POB/OA-N-L AUXILLARY GEAR PUMP	1
8	046243	SSF-130-00-2 FILTER HEAD	1
9	048670	SF6703MG FILTER ELEMENT	1
10	046242	GV-10 SUCTION FILTER GAUGE	1
11	047886	SPB-S-1-10-N04 BREATHER FILTER	1
12	048656	SP,1212 "X" FACTOR STEERING / PITCH MANIFOLD #1	1
13	048659	661436 PITCH CYLINDERS	2
14	048660	661579 LEFT/RIGHT HAND STEERING CYLINDER	1
15	048661	661491 FORWARD/REVERSE STEERING CYLINDER	2
16	046919	181420096 LEFT HAND SINGLE AXIS JOYSTICK CONTROL	1
17	046920	181420097 RIGHT HAND DUAL AXIS JOYSTICK CONTROL	1
18	046921	181710008 FOOT PEDAL CONTROL	1
19	045948	7574051 TANK MAGNETIC PLUG	1

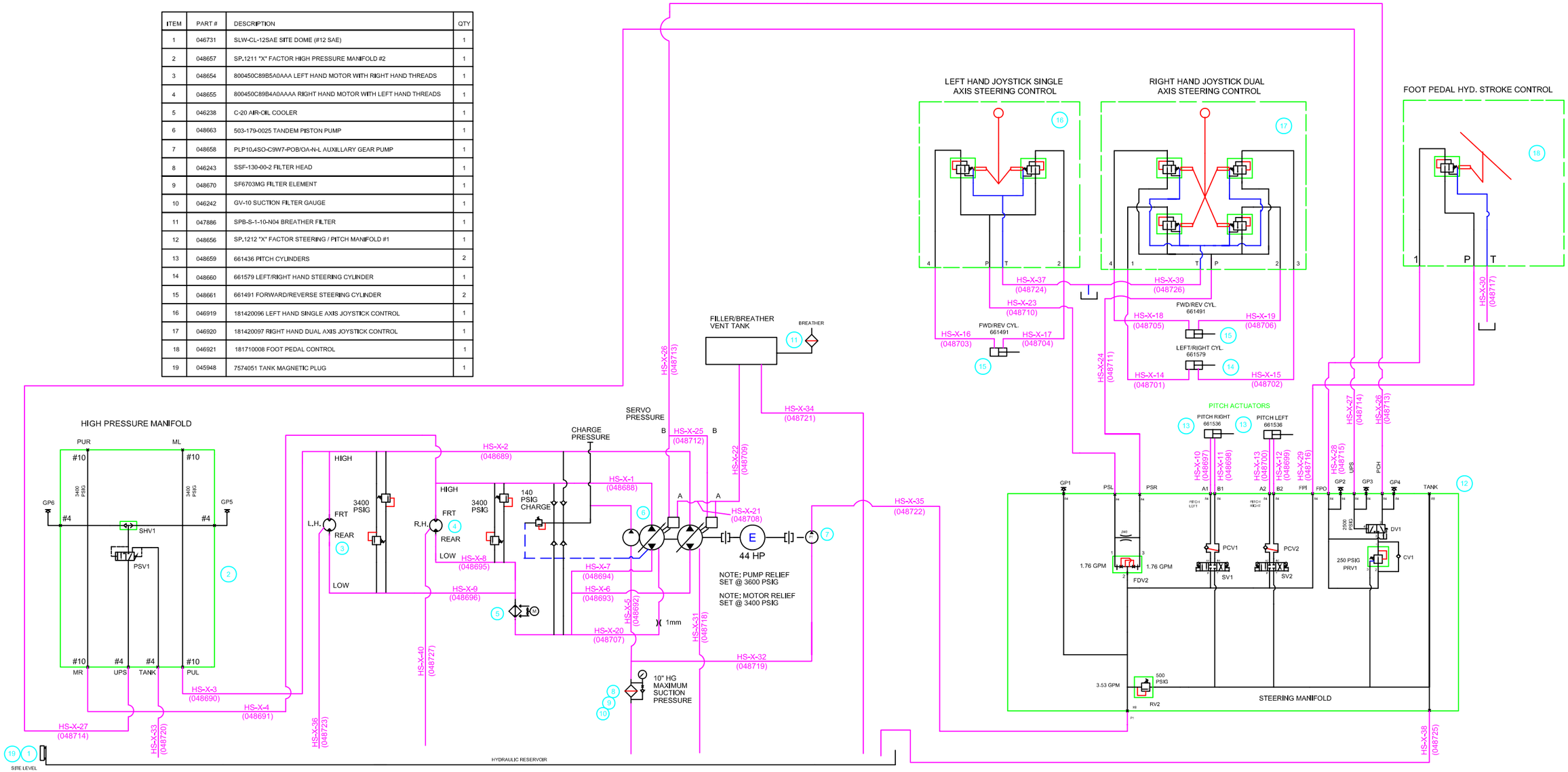

allen ENGINEERING CORPORATION P.O. BOX 819 PARAGOULD, ARK. 72451		TITLE: HYDRAULIC SCHEMATIC HDX600 RIDING TROWEL	
		MATERIAL:	
UNLESS OTHERWISE SPECIFIED		CONFIDENTIAL: INFORMATION CONTAINED HEREIN IS THE CONFIDENTIAL PROPERTY OF ALLEN ENGINEERING AND MUST NOT BE DISCLOSED WITHOUT PERMISSION PRINTS ARE SUBJECT TO RECALL, AND MUST BE RELEASED UPON DEMAND.	
1-PLACE DEC. ±	ANGULAR:	MACHINE SURFACE TEXTURE	PROJECT NUMBER: / NEXT ASSEMBLY: / L.F./S.F. / WT/lbs
2-PLACE DEC. ±		✓	
3-PLACE DEC. ±	DATE:		
AW	11/16/07	SCALE:	DRAWING NUMBER: 048798 / ISSUE: X
CHECKED BY:			

HDX600 Wiring Schematic

AS OF 11/15/07

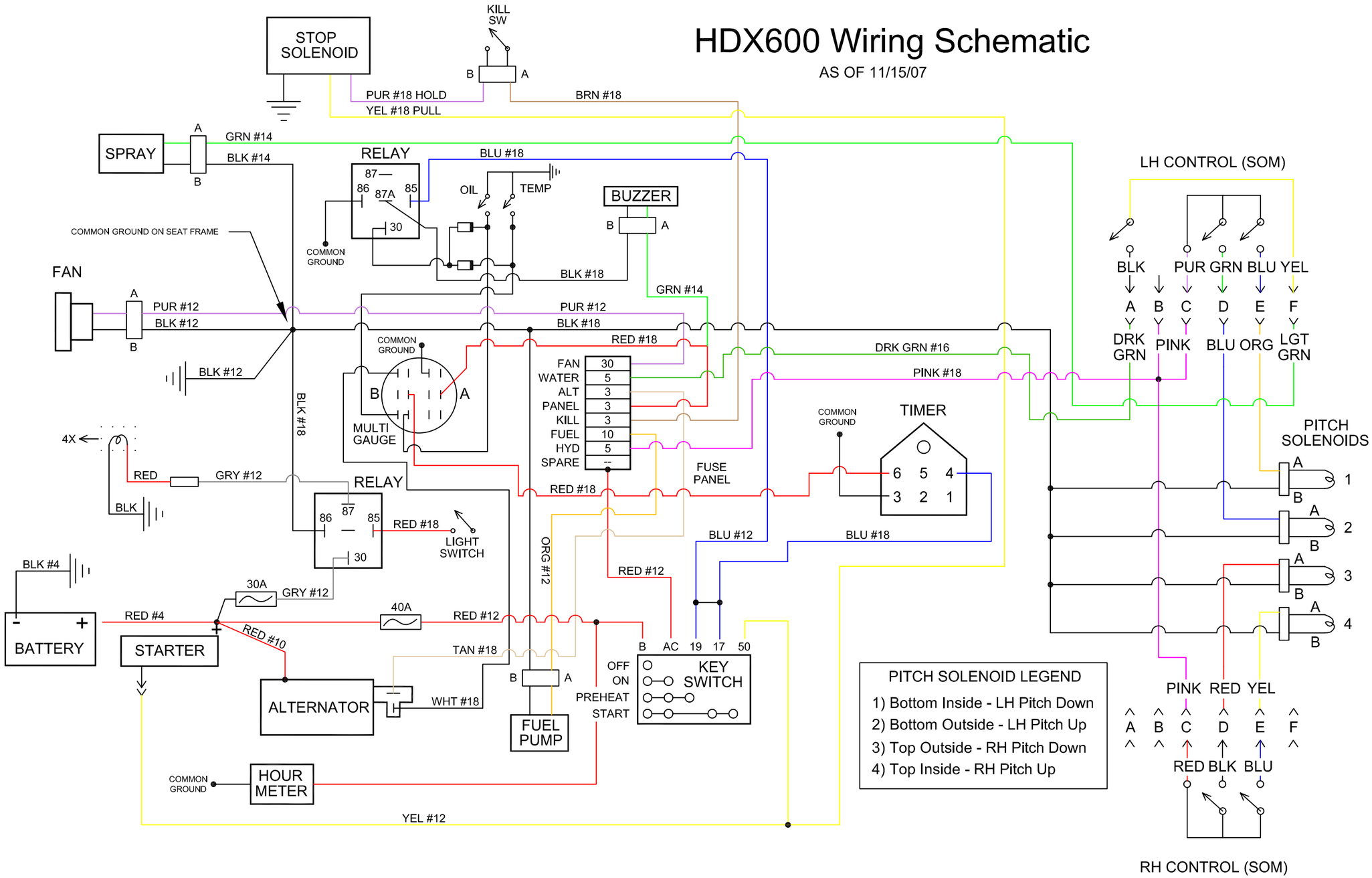

Allen ENGINEERING CORPORATION P.O. BOX 819 PARAGOULD, ARK. 72451	TITLE:	ELECTRICAL SCHEMATIC HDX600 RIDING TROWEL
	MATERIAL:	
UNLESS OTHERWISE SPECIFIED	CONFIDENTIAL: INFORMATION CONTAINED HEREIN IS THE CONFIDENTIAL PROPERTY OF ALLEN ENGINEERING AND MUST NOT BE DISCLOSED WITHOUT PERMISSION PRINTS ARE SUBJECT TO RECALL, AND MUST BE RELEASED UPON DEMAND.	
1-PLACE DEC. ± / 2-PLACE DEC. ± / 3-PLACE DEC. ±	ANGULAR: / MACHINE SURFACE TEXTURE ✓	PROJECT NUMBER: / NEXT ASSEMBLY: / L.F./S.F. / WT/lbs
AW 11/16/07	DATE: / SCALE:	DRAWING NUMBER: 048799 / ISSUE: X
CHECKED BY:		

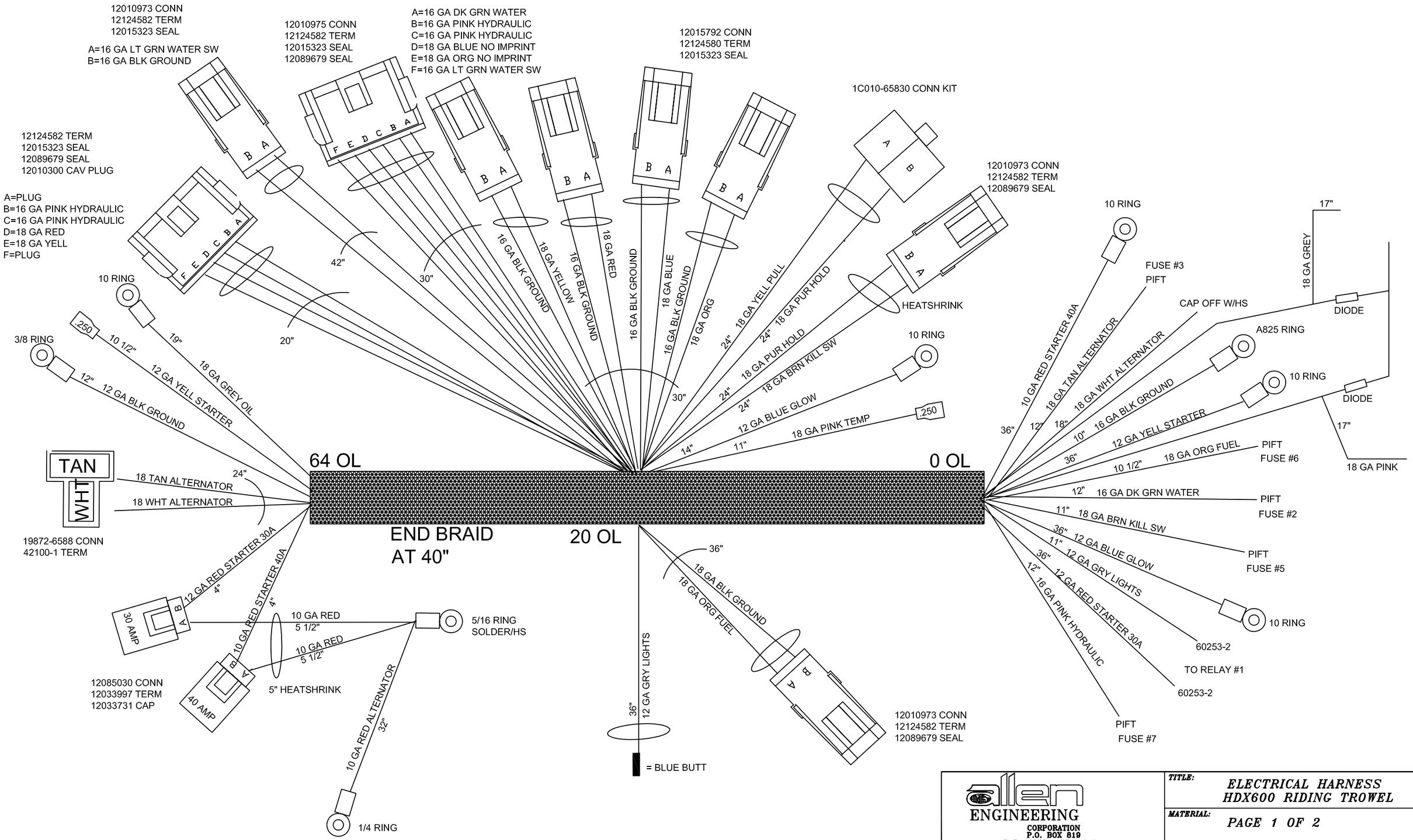

ENGINEERING
CORPORATION
P.O. BOX 819
PARAGOULD, ARK. 72451

UNLESS OTHERWISE SPECIFIED

1-PLACE DEC. ±	ANGULAR:	MACHINE SURFACE TEXTURE ✓
2-PLACE DEC. ±		
3-PLACE DEC. ±	DATE:	
	AW 11/16/07	SCALE:
CHECKED BY:		

TITLE: ELECTRICAL HARNESS HDX600 RIDING TROWEL

MATERIAL: PAGE 1 OF 2

CONFIDENTIAL: INFORMATION CONTAINED HEREIN IS THE CONFIDENTIAL PROPERTY OF ALLEN ENGINEERING AND MUST NOT BE DISCLOSED WITHOUT PERMISSION PRINTS ARE SUBJECT TO RECALL, AND MUST BE RELEASED UPON DEMAND.

PROJECT NUMBER:	NEXT ASSEMBLY:	L.F./S.F.	WT/lbs

DRAWING NUMBER: 048667

ISSUE: X

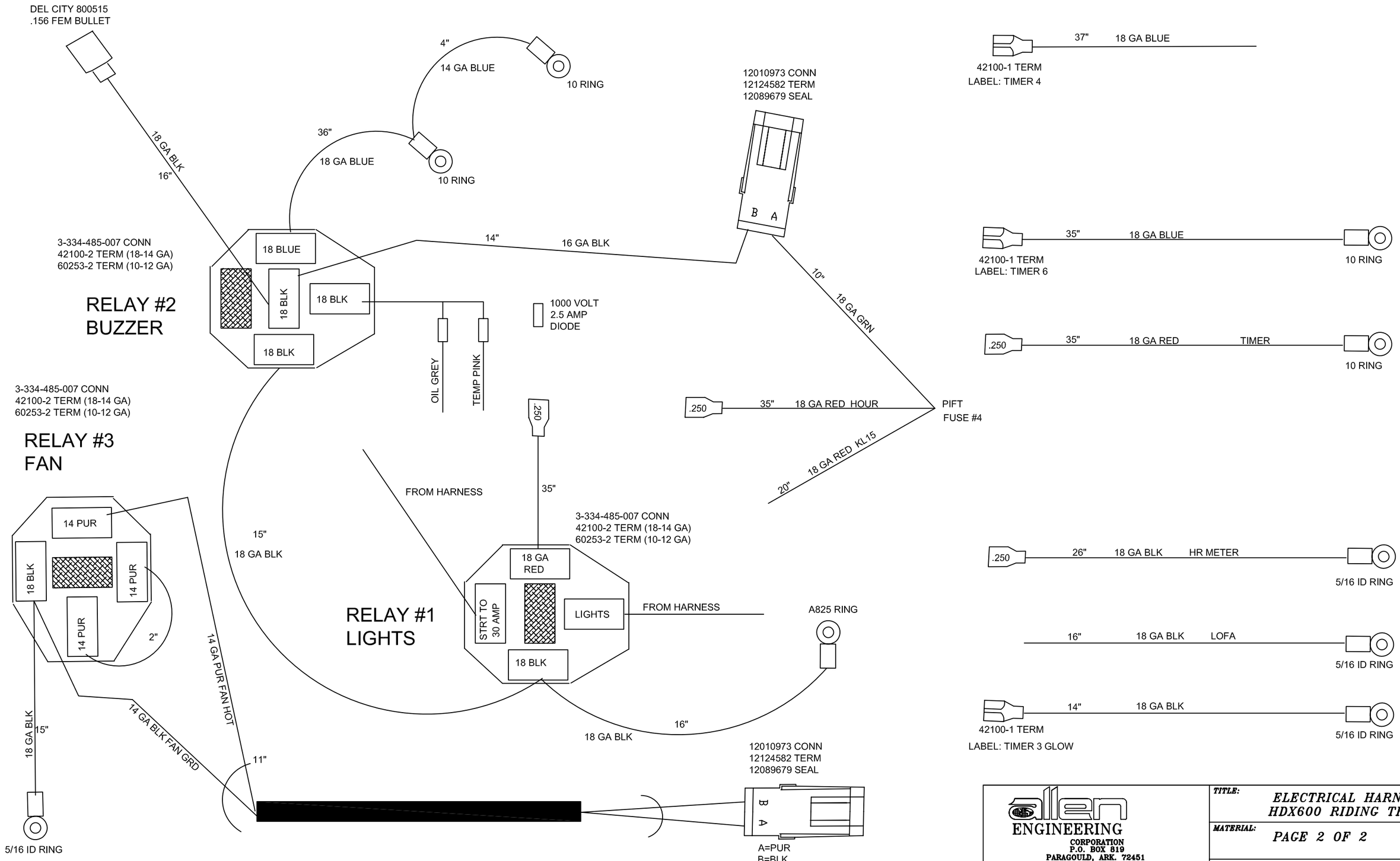

ENGINEERING CORPORATION P.O. BOX 819 PARAGOULD, ARK. 72451		TITLE: ELECTRICAL HARNESS HDX600 RIDING TROWEL	
		MATERIAL: PAGE 2 OF 2	
UNLESS OTHERWISE SPECIFIED		CONFIDENTIAL: INFORMATION CONTAINED HEREIN IS THE CONFIDENTIAL PROPERTY OF ALLEN ENGINEERING AND MUST NOT BE DISCLOSED WITHOUT PERMISSION PRINTS ARE SUBJECT TO RECALL, AND MUST BE RELEASED UPON DEMAND.	
1-PLACE DEC. ±	ANGULAR:	MACHINE SURFACE TEXTURE	PROJECT NUMBER: / NEXT ASSEMBLY: / L.F./S.F. / WT/lbs
2-PLACE DEC. ±		✓	
3-PLACE DEC. ±	DATE:		
AW	11/16/07	SCALE:	DRAWING NUMBER: 048667 / ISSUE: X
CHECKED BY:			

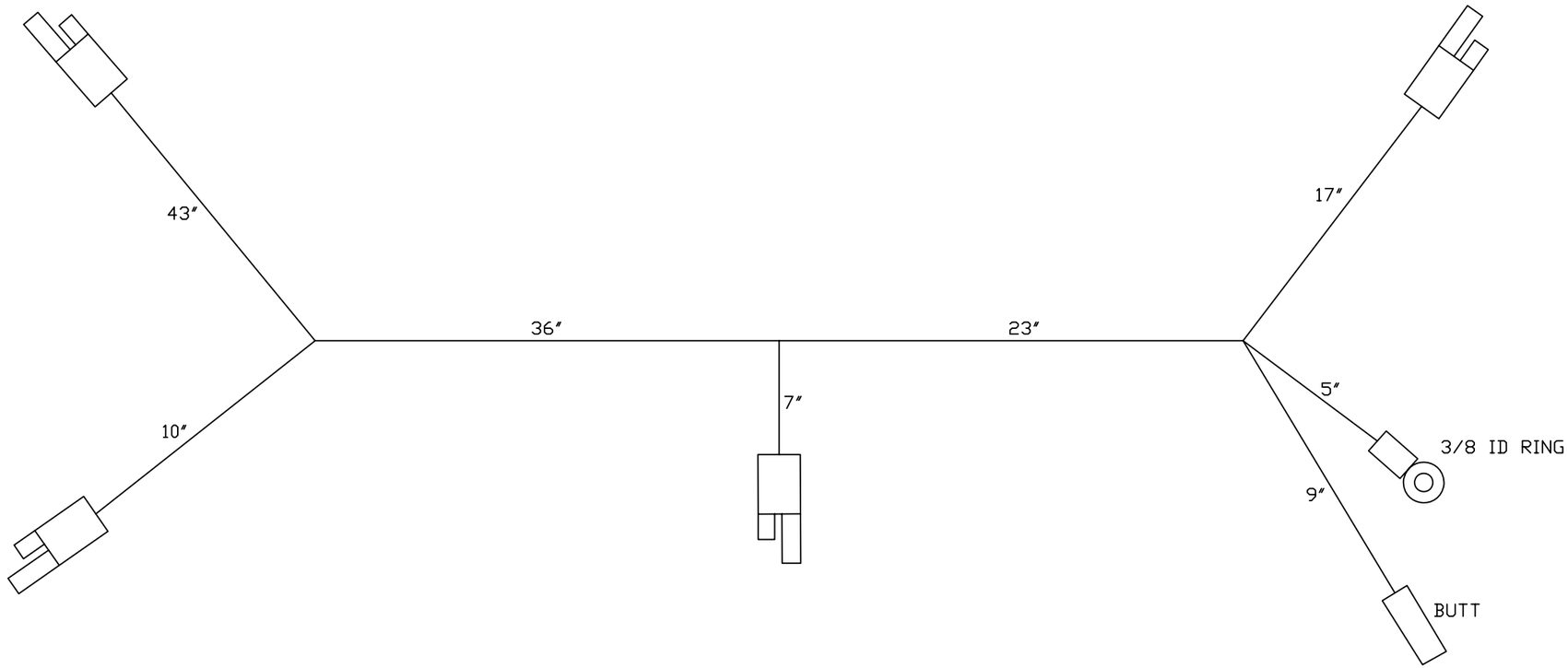

DO NOT SCALE COPIES
ALL DIM ARE IN INCHES

NO.	REVISION	BY	CHKD	DATE

allen ENGINEERING
CORPORATION
P.O. BOX 819
PARAGOULD, ARK. 72451

UNLESS OTHERWISE SPECIFIED

1–PLACE DEC. ±
2–PLACE DEC. ±
3–PLACE DEC. ±

ANGULAR:

MACHINE SURFACE TEXTURE ✓

DRAWN BY: AW DATE: 10/17/07

CHECKED BY:

SCALE:

REQ'D:

TITLE: LIGHT HARNESS HDX600 RIDING TROWEL

MATERIAL: PURCHASED – HI–POINT WIRE

CONFIDENTIAL: INFORMATION CONTAINED HEREIN IS THE CONFIDENTIAL PROPERTY OF ALLEN ENGINEERING AND MUST NOT BE DISCLOSED WITHOUT PERMISSION PRINTS ARE SUBJECT TO RECALL, AND MUST BE RELEASED UPON DEMAND.

PROJECT NUMBER:	NEXT ASSEMBLY:	L.F./S.F.	WT/lbs
PR2186			

DRAWING NUMBER: 048668

ISSUE: X

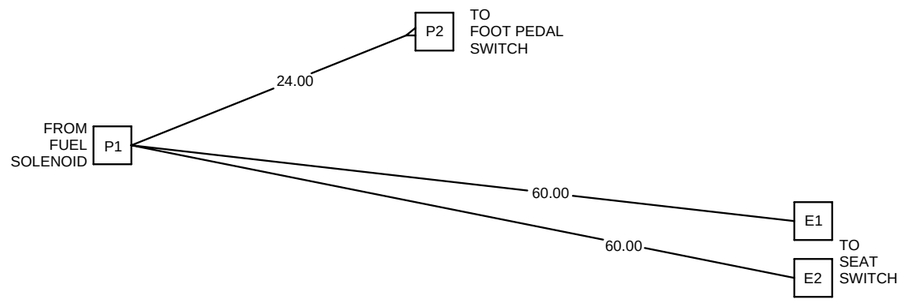

HARNESS JIG DIAGRAM

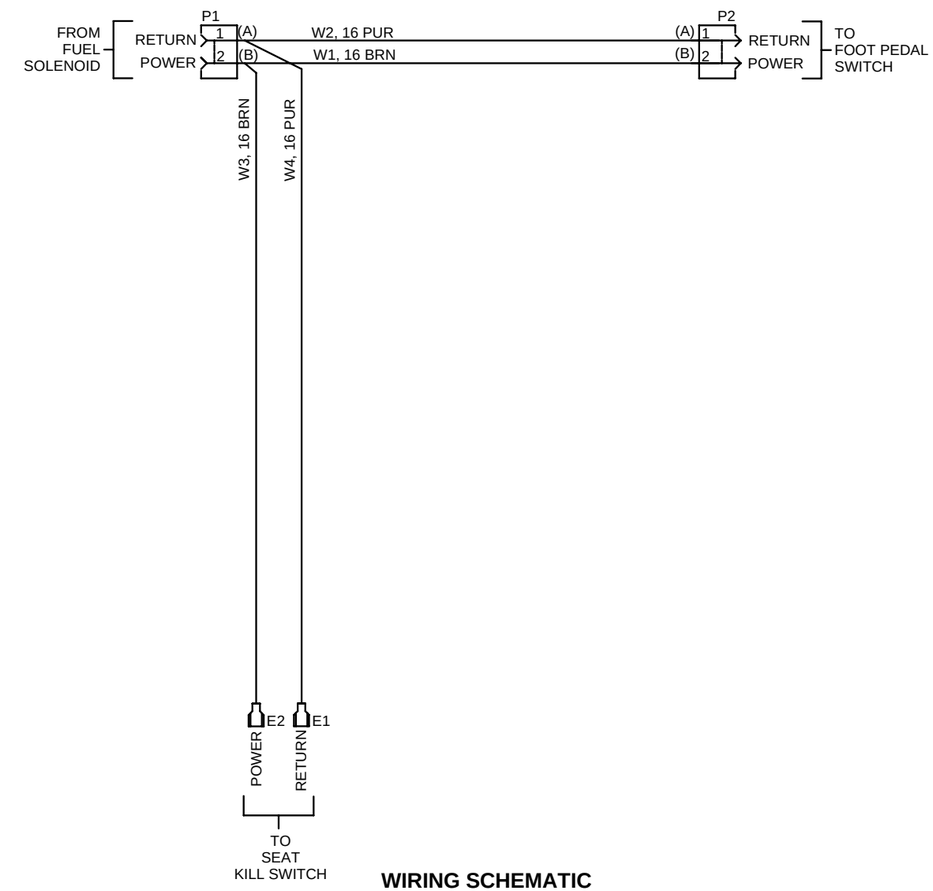

WIRING SCHEMATIC

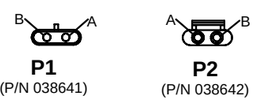

P1
(P/N 038641)

P2
(P/N 038642)

MULTI-CONNECTOR
CONTACT POSITION LEGEND
(CONNECTING VIEW OF HOUSING)

NO.	LG	CLR	SIZE	I/N	FROM	PT	TO	PT	FROM	TO	FROM	TO	REMARKS
4	60.0	PUR	16	8	P1	A	E1	-	CRMP	CRMP	5/16	3/16	RETURN
3	60.0	BRN	16	6	P1	B	E2	-	CRMP	CRMP	5/16	3/16	POWER
2	24.0	PUR	16	8	P1	A	P2	A	CRMP	CRMP	5/16	5/16	RETURN
1	24.0	BRN	16	6	P1	B	P2	B	CRMP	CRMP	5/16	5/16	POWER
WIRE					LOCATION				TERMINATION		STRIP LENGTH		

WIRE LIST

W1,2,3,4	
E1,2	
P1,2	
LAST USED	NOT USED

CLASS DESIGNATOR LETTERS

SCHEMATIC, WIRE LIST AND JIG DIAGRAM
VENDOR ITEM DRAWING

allen ENGINEERING CORPORATION
P.O. BOX 819, PARAGOULD, AR 72451

TITLE: HARNESS, KILL SWITCH Y-ADAPTOR
USED ON: SUBCONTACTOR PART

APPROVAL	DATE	CLASS	PROJECT NUMBER	SIZE	PART NUMBER
DRAWN JRL	06/27/06	4		D	047545
CHECKED BD	07/13/06	SCALE NONE	NEXT ASSEMBLY MULTIPLE	REQD 1	WEIGHT / LF/SF / REVISION -

SH 2 OF 3

Parts List			
ITEM	PART #	DESCRIPTION	QTY
1	010001	FSTN, HHCS 1/4-20 X 1/2 GR 5	4
2	010036	FSTN, HHCS 3/8-16 X 1	8
3	010082	FSTN, FW 5/16	4
4	010089	FSTN, LW 1/4	4
5	010091	FSTN, LW 3/8	8
6	010098	FSTN, NUT HEX 1/4-20	4
7	010220	ELBOW 1/4 X 1/4 90 DEG STREET BR	1
8	010568	FSTN, RHMS 10-32 X 1/2	8
9	012702	TIP--SPRAY 8001 (FINE)	2
10	012940	BUSHING 3/8 X 1/4 HEX RED BI	1
11	012994	RIVET, 1/8x3/8 ALUM DOME HD [closed]	4
12	020542	FSTN, NUT STOVER LOCK 1/4-20	6
13	029568	FSTN, NUT NYLOK 10-32	12
14	032097	DECAL, SERIAL NUMBER PLATE	1
15	032159	DECAL, LIFT HERE ONLY (SMALL)	4
16	032896	DECAL, "MADE IN USA"	1
17	033735	PUMP, SPRAY SYSTEM	1
18	034017	DECAL, AEC PATENT PENDING	1
19	036767	DECAL, RETARDANT ONLY	1
20	036791	FSTN, RHMS 10-32 X 1 1/4	4
21	036881	LIGHT, PREP F/ RIDING TROWELS	2
22	037771	BATTERY 12V 625CA	1
23	039082	FSTN, HHCS 5/16-18 X 3	2
24	039324	DECAL, RIDING TROWEL PAT	1
25	039778	DECAL, GREASE THRUST BEARING DAILY	2
26	040004	NUT, 5/16-18 GR-C STOVER HEX	2
27	040209	FILTER, RIDER SPRAY SYSTEM	1
28	040387	FTG, 3/8 BRASS STREET ELBOW (90°)	1
29	040388	FTG, 3/8X1/4 BRASS FM TO FM REDUCER	1
30	041509	DECAL, HYDRAULIC OIL CAP	1
31	041604	BODY, NYLON CHECK VALVE NOZ	2
32	041624	RETAINER, NYLON SPRAY TIP	2
33	042343	FSTN, SFBHCS 1/4"-20 x 3/4	18
34	043920	FILTER, IN-LINE DIESEL	1
35	045757	ISOL, REAR NEOPRENE MOTOR MT	4
36	045921	FTG, F6400-8-8-O STR	2
37	045924	FTG, F6602-6-6-6-O TEE	1
38	045932	FTG, F6803-16-16-16-NWO TEE	1
39	045933	FTG, F2406-16-8-O STR RDCR	1
40	045948	FTG, 7574051 MAGNETIC PLUG	1
41	046243	FILTER SUCTION HEAD, SSF130002	1
42	046289	FTG., F2406-6-4	1
43	046356	F6804-08-08-08-NWO FLARE-O FITTING	1
44	046362	FITTING, F6801-6-8-NWO	5
45	046369	GV-5 SUCTION GAUGE	1
46	046696	BOX, STANDARD BATTERY	1
47	046731	SIGHT GLASS SLW-CL-12-SAE	1
48	046987	FTG, F6500-8-8-O 90° ELB	1
49	047251	PAD, 10-7/8x7-1/4x1 BARRIER	1
50	047294	PAD, 7-7/16x5-11/16x1-1/2 BARRIER	2
51	047546	FSTN, 1/4-20 PAL SNAP NUT	18
52	047578	STRAINER, POLY 50 MESH	2
53	047700	TANK, 6 GALLON WATER PLASTIC	1
54	047701	CAP, 3-1/2" VENTED BLACK	1
55	047702	FTG, "L" FUEL 1/4 NIPPLE 90°	1
56	047703	BUSHING, WATER TANK HD550 20-7730	1
57	047933	ELBOW, 1/4 PUSHLOK x 1/4 NPT PLASTIC	1
58	048329	FTG, F6400-4-4-O STR	4
59	048501	MAIN FRAME, X1	1
60	048561	BEARING ASSEMBLY F/ ROTOR MOUNT X1	4
61	048562	CUSHION, BOTTOM TANK (RUBBER) X1	2
62	048563	CHANNEL, BATTERY HOLD-DOWN X1	1
63	048564	BRACKET, RH SPRAY NOZZLE X1	1
64	048566	BRACKET, LH SPRAY NOZZLE X1	1
65	048571	FOOT REST, X1	1
66	048577	TANK, FUEL ALUM F/ X1	1
67	048583	COVER, FRONT DECK X1	1
68	048588	CUSHION, TOP TANK (RUBBER) X1	1
69	048589	ROD, BATTERY HOLD-DOWN X1	2
70	048591	STRAP, RETARDANT TANK HOLD-DOWN X1	2
71	048594	ASSEMBLY, ROTOR CONTROL PEDAL X1	1
72	048652	TEE, PLASTIC 1/4 x 1/4 x 1/4	1
73	048653	BARB, HOSE PLASTIC 1/4" x 1/4 NPT	3
74	048657	MANIFOLD, HIGH PRESSURE X1	1
75	048669	PLATE, FRONT COVER F/ MAINFRAME X1	1
76	048670	ELEMENT, FILTER SF6703	1
77	048680	CAP, VENTED W/ GAUGE X1	1
78	048685	DECAL, FRONT HDX600 4"	1
79	048730	COUPLING, SMK 20-9/16 TEST	3
80	048734	FTG., 6410-10-4-O	4
81	048737	FTG., 6407-16-16-NWO	1
82	048738	FTG., F2406-16-10-O	1
83	048739	FTG., F6502-10-10-O	1

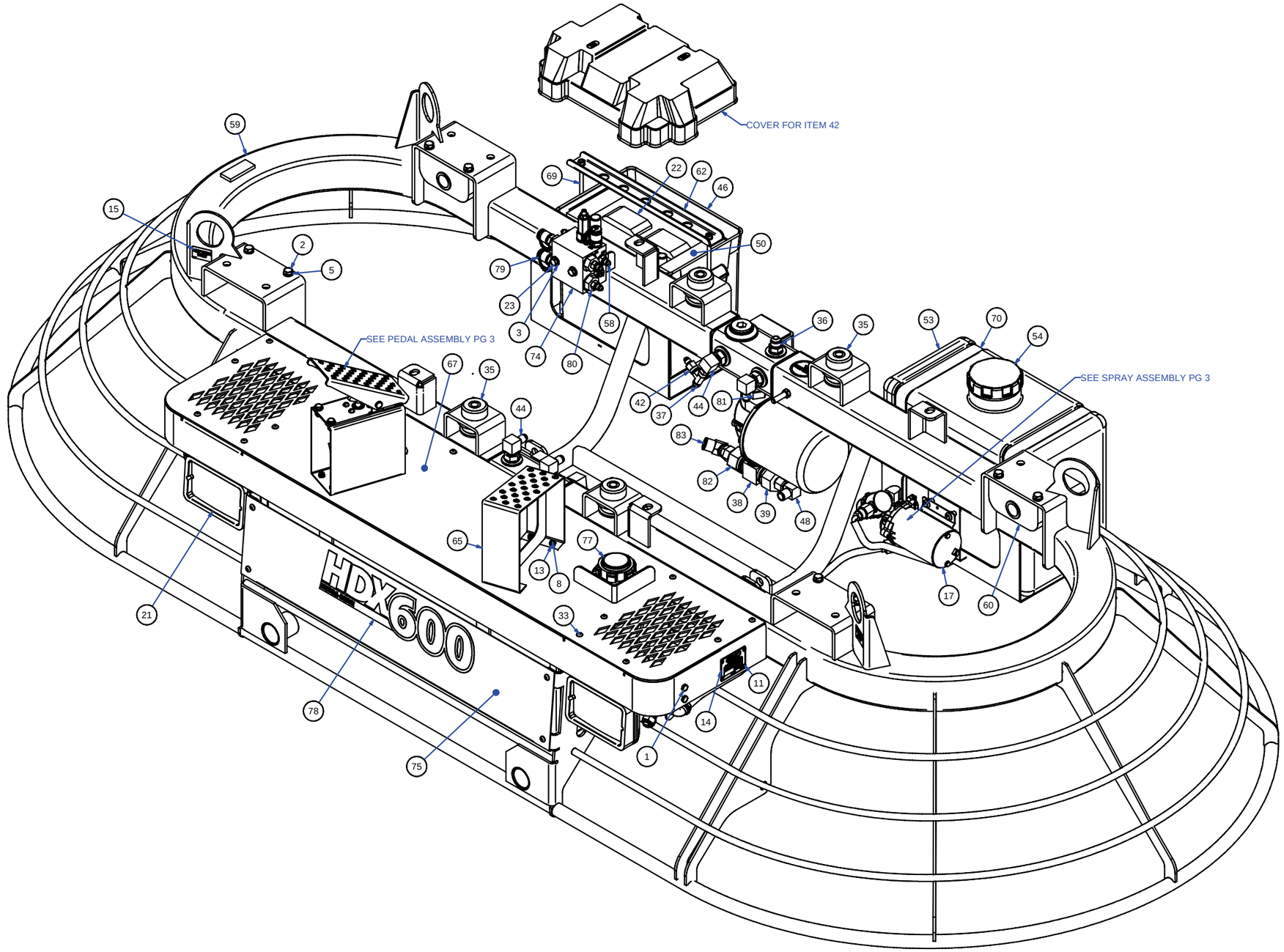

CONFIDENTIAL: INFORMATION CONTAINED HEREIN IS THE CONFIDENTIAL PROPERTY OF ALLEN ENGINEERING CORPORATION AND MUST NOT BE DISCLOSED WITHOUT PERMISSION. PRINTS ARE SUBJECT TO RECALL AND MUST BE RELEASED UPON DEMAND.

allen ENGINEERING CORPORATION
P.O. BOX 819
PARAGOULD, AR 72451

TITLE: Mainframe Assembly HDX600 Riding Trowel

MATERIAL: See Parts List

1-PLACE DEC: 2-PLACE DEC: 3-PLACE DEC: ANLR: FRAC: MACHINE SURFACE TEXTURE

UNLESS OTHERWISE SPECIFIED DATE

DRAWN BY: AW 11/1/07 ✓

PROJECT NUMBER: PR2186

D

PART NUMBER: 048522

CHECKED BY: SCALE: NEXT ASSEMBLY REQ'D WEIGHT: 327.26 lbmass UFSF: REVISION: X

SHEET 1 OF 4

Parts List			
ITEM	PART #	DESCRIPTION	QTY
1	010001	FSTN, HHCS 1/4-20 X 1/2 GR 5	4
2	010036	FSTN, HHCS 3/8-16 X 1	8
3	010082	FSTN, FW 5/16	4
4	010089	FSTN, LW 1/4	4
5	010091	FSTN, LW 3/8	8
6	010098	FSTN, NUT HEX 1/4-20	4
7	010220	ELBOW 1/4 X 1/4 90 DEG STREET BR	1
8	010568	FSTN, RHMS 10-32 X 1/2	8
9	012702	TIP--SPRAY 8001 (FINE)	2
10	012940	BUSHING 3/8 X 1/4 HEX RED BI	1
11	012994	RIVET, 1/8x3/8 ALUM DOME HD [closed]	4
12	020542	FSTN, NUT STOVER LOCK 1/4-20	6
13	029568	FSTN, NUT NYLOK 10-32	12
14	032097	DECAL, SERIAL NUMBER PLATE	1
15	032159	DECAL, LIFT HERE ONLY (SMALL)	4
16	032896	DECAL, "MADE IN USA"	1
17	033735	PUMP, SPRAY SYSTEM	1
18	034017	DECAL, AEC PATENT PENDING	1
19	036767	DECAL, RETARDANT ONLY	1
20	036791	FSTN, RHMS 10-32 X 1 1/4	4
21	036881	LIGHT, PREP F/ RIDING TROWELS	2
22	037771	BATTERY 12V 625CA	1
23	039082	FSTN, HHCS 5/16-18 X 3	2
24	039324	DECAL, RIDING TROWEL PAT	1
25	039778	DECAL, GREASE THRUST BEARING DAILY	2
26	040004	NUT, 5/16-18 GR-C STOVER HEX	2
27	040209	FILTER, RIDER SPRAY SYSTEM	1
28	040387	FTG, 3/8 BRASS STREET ELBOW (90°)	1
29	040388	FTG, 3/8X1/4 BRASS FM TO FM REDUCER	1
30	041509	DECAL, HYDRAULIC OIL CAP	1
31	041604	BODY, NYLON CHECK VALVE NOZ	2
32	041624	RETAINER, NYLON SPRAY TIP	2
33	042343	FSTN, SFBHCS 1/4"-20 x 3/4	18
34	043920	FILTER, IN-LINE DIESEL	1
35	045757	ISOL, REAR NEOPRENE MOTOR MT	4
36	045921	FTG, F6400-8-8-O STR	2
37	045924	FTG, F6602-6-6-6-O TEE	1
38	045932	FTG, F6803-16-16-16-NWO TEE	1
39	045933	FTG, F2406-16-8-O STR RDCR	1
40	045948	FTG, 7574051 MAGNETIC PLUG	1
41	046243	FILTER SUCTION HEAD, SSF130002	1
42	046289	FTG., F2406-6-4	1
43	046356	F6804-08-08-08-NWO FLARE-O FITTING	1
44	046362	FITTING, F6801-6-8-NWO	5
45	046369	GV-5 SUCTION GAUGE	1
46	046696	BOX, STANDARD BATTERY	1
47	046731	SIGHT GLASS SLW-CL-12-SAE	1
48	046987	FTG, F6500-8-8-O 90° ELB	1
49	047251	PAD, 10-7/8x7-1/4x1 BARRIER	1
50	047294	PAD, 7-7/16x5-11/16x1-1/2 BARRIER	2
51	047546	FSTN, 1/4-20 PAL SNAP NUT	18
52	047578	STRAINER, POLY 50 MESH	2
53	047700	TANK, 6 GALLON WATER PLASTIC	1
54	047701	CAP, 3-1/2" VENTED BLACK	1
55	047702	FTG, "L" FUEL 1/4 NIPPLE 90°	1
56	047703	BUSHING, WATER TANK HD550 20-7730	1
57	047933	ELBOW, 1/4 PUSHLOK x 1/4 NPT PLASTIC	1
59	048246	HOSE, 3/8" WATER LINE HD550C/HD560	9.5'
58	048329	FTG, F6400-4-4-O STR	4
59	048501	MAIN FRAME, X1	1
60	048561	BEARING ASSEMBLY F/ ROTOR MOUNT X1	4
61	048562	CUSHION, BOTTOM TANK (RUBBER) X1	2
62	048563	CHANNEL, BATTERY HOLD-DOWN X1	1
63	048564	BRACKET, RH SPRAY NOZZLE X1	1
64	048566	BRACKET, LH SPRAY NOZZLE X1	1
65	048571	FOOT REST, X1	1
66	048577	TANK, FUEL ALUM F/ X1	1
67	048583	COVER, FRONT DECK X1	1
68	048588	CUSHION, TOP TANK (RUBBER) X1	1
69	048589	ROD, BATTERY HOLD-DOWN X1	2
70	048591	STRAP, RETARDANT TANK HOLD-DOWN X1	2
71	048594	ASSEMBLY, ROTOR CONTROL PEDAL X1	1
72	048652	TEE, PLASTIC 1/4 x 1/4 x 1/4	1
73	048653	BARB, HOSE PLASTIC 1/4" x 1/4 NPT	3
74	048657	MANIFOLD, HIGH PRESSURE X1	1
75	048669	PLATE, FRONT COVER F/ MAINFRAME X1	1
76	048670	ELEMENT, FILTER SF6703	1
77	048680	CAP, VENTED W/ GAUGE X1	1
78	048685	DECAL, FRONT HDX600 4"	1
79	048730	COUPLING, SMK 20-9/16 TEST	3
80	048734	FTG., 6410-10-4-O	4
81	048737	FTG., 6407-16-16-NWO	1
82	048738	FTG., F2406-16-10-O	1
83	048739	FTG., F6502-10-10-O	1

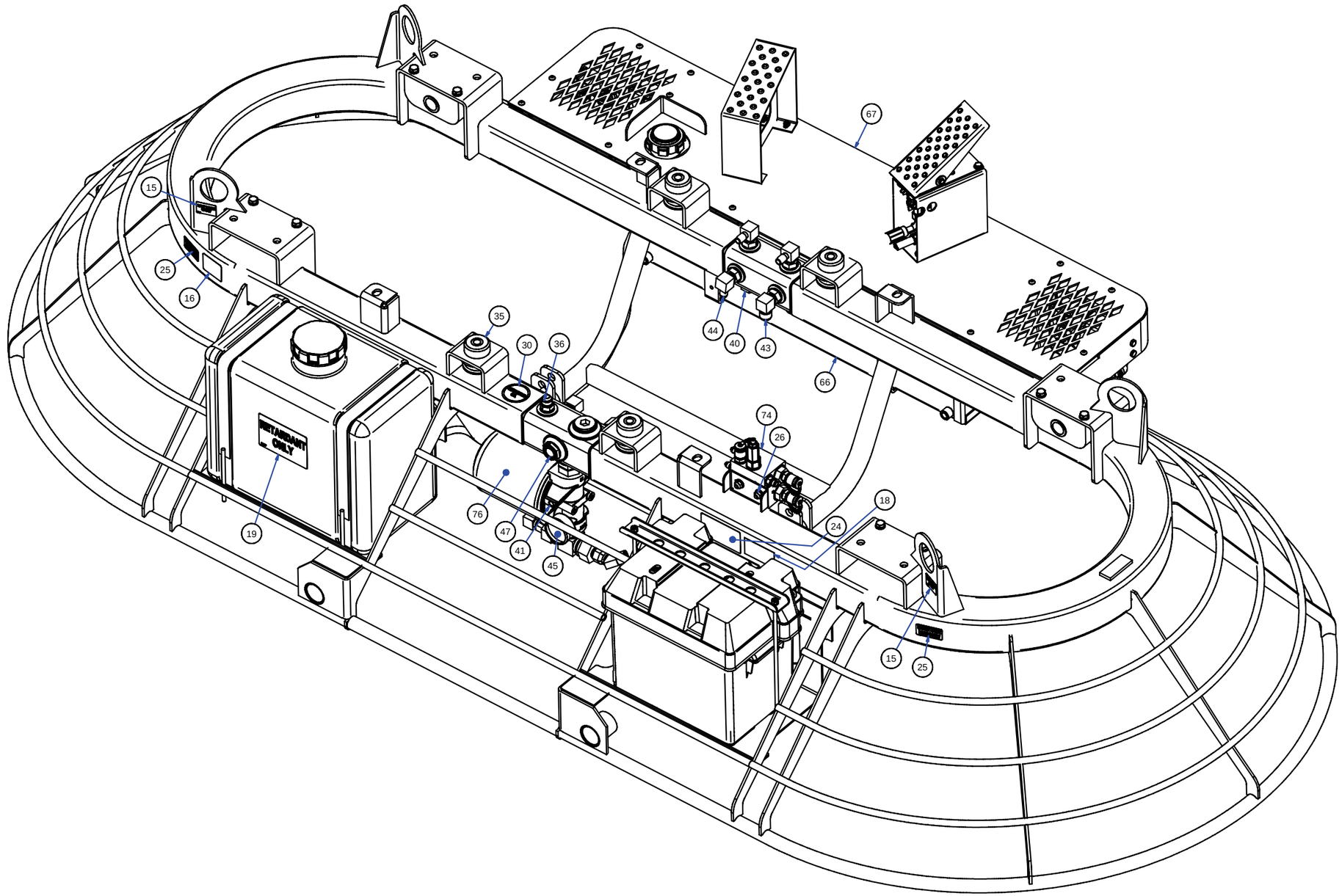

CONFIDENTIAL: INFORMATION CONTAINED HEREIN IS THE CONFIDENTIAL PROPERTY OF ALLEN ENGINEERING CORPORATION AND MUST NOT BE DISCLOSED WITHOUT PERMISSION. PRINTS ARE SUBJECT TO RECALL AND MUST BE RELEASED UPON DEMAND.

allen ENGINEERING CORPORATION
P.O. BOX 819
PARAGOULD, AR 72451

TITLE: Rear Mainframe Assembly HDX600 Riding Trowel

MATERIAL: SEE Parts List

1-PLACE DEC: ANLR: MACHINE SURFACE TEXTURE
2-PLACE DEC:
3-PLACE DEC: FRAC:
UNLESS OTHERWISE SPECIFIED DATE

DRAWN BY: AW 9/19/07 ✓

CHECKED BY:

SCALE:

PROJECT NUMBER: PR2186

D

PART NUMBER: 048522

NEXT ASSEMBLY REQ'D WEIGHT: 327.26 lbmass LFTSF: REVISION: X

SHEET 2 OF 4

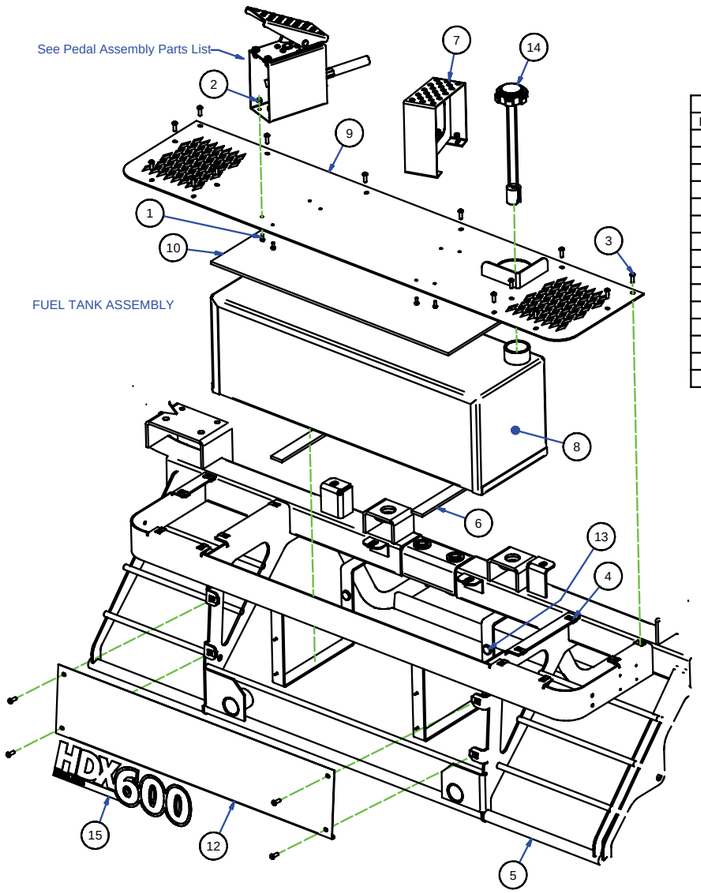

Fuel Tank Mounting Parts List			
ITE	PART #	DESCRIPTION	QTY
1	010568	FSTN, RHMS 10-32 X 1/2	8
2	029568	FSTN, NUT NYLOK 10-32	8
3	042343	FSTN, SFBHCS 1/4"-20 x 3/4	18
4	047546	FSTN, 1/4-20 PAL SNAP NUT	18
5	048501	MAIN FRAME, X1	1
6	048562	CUSHION, BOTTOM TANK (RUBBER) X1	2
7	048571	FOOT REST, X1	1
8	048577	TANK, FUEL ALUM F/ X1	1
9	048583	COVER, FRONT DECK X1	1
10	048588	CUSHION, TOP TANK (RUBBER) X1	1
11	048594	ASSEMBLY, ROTOR CONTROL PEDAL X1	1
12	048669	PLATE, FRONT COVER F/ MAINFRAME X1	1
13	048676	PLUG, HOLLOW SBR RUBBER	8
14	048680	CAP, VENTED W/ GAUGE X1	1
15	048685	DECAL, FRONT HDX600 4"	1

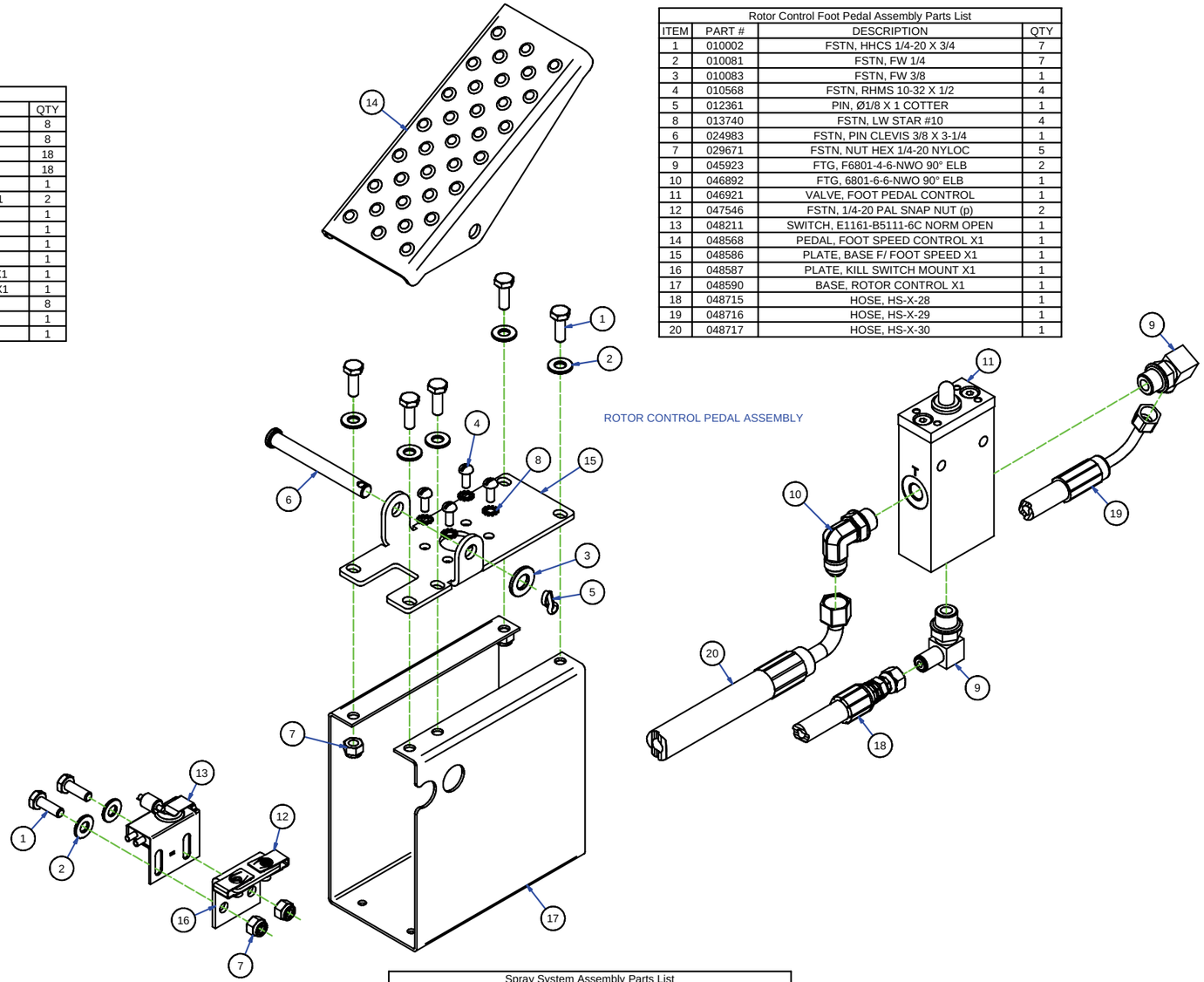

Rotor Control Foot Pedal Assembly Parts List			
ITEM	PART #	DESCRIPTION	QTY
1	010002	FSTN, HHCS 1/4-20 X 3/4	7
2	010081	FSTN, FW 1/4	7
3	010083	FSTN, FW 3/8	1
4	010568	FSTN, RHMS 10-32 X 1/2	4
5	012361	PIN, Ø1/8 X 1 COTTER	1
8	013740	FSTN, LW STAR #10	4
6	024983	FSTN, PIN CLEVIS 3/8 X 3-1/4	1
7	029671	FSTN, NUT HEX 1/4-20 NYLOC	5
9	045923	FTG, F6801-4-6-NWO 90° ELB	2
10	046892	FTG, 6801-6-6-NWO 90° ELB	1
11	046921	VALVE, FOOT PEDAL CONTROL	1
12	047546	FSTN, 1/4-20 PAL SNAP NUT (p)	2
13	048211	SWITCH, E1161-B5111-6C NORM OPEN	1
14	048568	PEDAL, FOOT SPEED CONTROL X1	1
15	048586	PLATE, BASE F/ FOOT SPEED X1	1
16	048587	PLATE, KILL SWITCH MOUNT X1	1
17	048590	BASE, ROTOR CONTROL X1	1
18	048715	HOSE, HS-X-28	1
19	048716	HOSE, HS-X-29	1
20	048717	HOSE, HS-X-30	1

Spray Nozzle Parts List			
ITEM	PART #	DESCRIPTION	QTY
1	012702	TIP, 80°x0.10 GPM BRASS SPRAY	1
2	041604	BODY, NYLON CHECK VALVE	1
3	041624	RETAINER, NYLON SPRAY TIP	1
4	047578	STRAINER, POLY 50 MESH	1

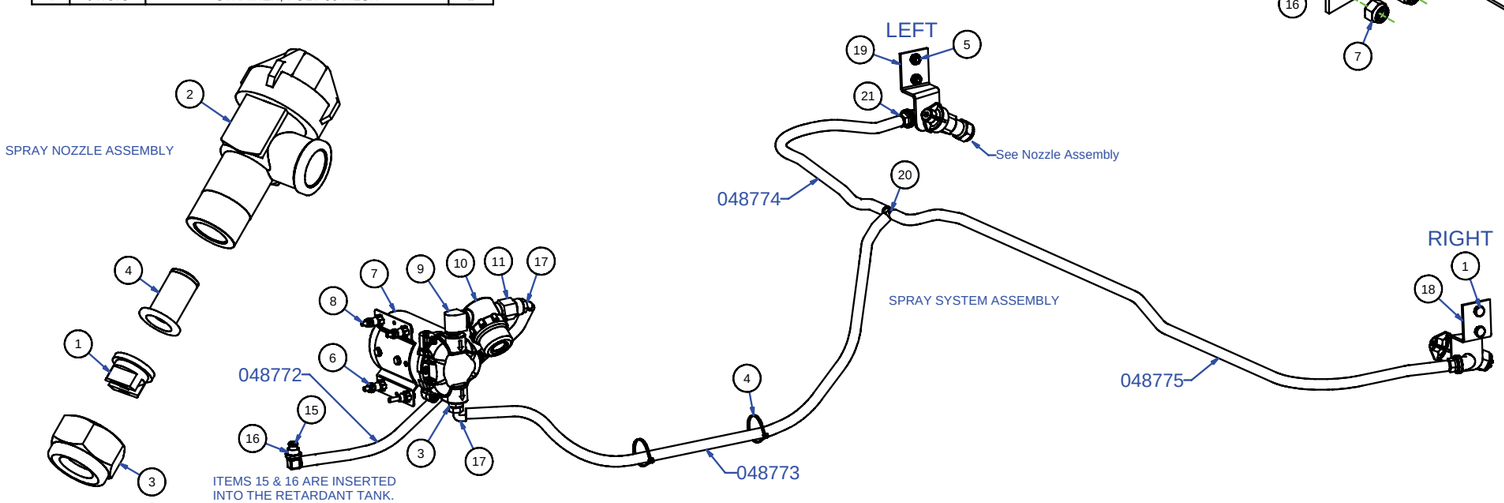

Spray System Assembly Parts List			
ITEM	PART #	DESCRIPTION	QTY
1	010001	FSTN, HHCS 1/4-20 X 1/2 GR 5	4
2	012702	TIP, 80°x0.10 GPM BRASS SPRAY	2
3	012940	BUSHING 3/8 X 1/4 HEX RED BI	1
4	013292	TIE, 15.0 LG BLK STD CABLE	2
5	020542	FSTN, NUT STOVER LOCK 1/4-20	4
6	029568	FSTN, NUT NYLOK 10-32	4
7	033735	PUMP, SPRAY SYSTEM	1
8	036791	FSTN, RHMS 10-32 X 1 1/4	4
9	038105	ELBOW, BRASS STREET 3/8	1
10	040209	FILTER, RIDER SPRAY SYSTEM	1
11	040388	FTG, 3/8X1/4 BRASS FM TO FM REDUCER	1
12	041604	BODY, NYLON CHECK VALVE NOZ	2
13	041624	RETAINER, NYLON SPRAY TIP	2
14	047578	STRAINER, POLY 50 MESH	2
15	047702	FTG, "L" FUEL 1/4 NIPPLE 90°	1
16	047703	BUSHING, WATER TANK HD550 20-7730	1
17	047933	ELBOW, 1/4 PUSHLOK x 1/4 NPT PLASTIC	2
18	048564	BRACKET, RH SPRAY NOZZLE X1	1
19	048566	BRACKET, LH SPRAY NOZZLE X1	1
20	048652	TEE, PLASTIC 1/4 x 1/4 x 1/4	1
21	048653	BARB, HOSE PLASTIC 1/4" x 1/4 NPT	2
22	048796	KIT, HOSE F/ HDX600 SPRAY SYSTEM	1

CONFIDENTIAL: INFORMATION CONTAINED HEREIN IS THE CONFIDENTIAL PROPERTY OF ALLEN ENGINEERING CORPORATION AND MUST NOT BE DISCLOSED WITHOUT PERMISSION. PRINTS ARE SUBJECT TO RECALL AND MUST BE RELEASED UPON DEMAND.

allen ENGINEERING CORPORATION
P.O. BOX 819
PARAGOULD, AR 72451

TITLE: Miscellaneous Assemblies for Main Frame Assembly

MATERIAL: See Parts Lists

1-PLACE DEC: 2-PLACE DEC: 3-PLACE DEC: ANLR: FRAC: MACHINE SURFACE TEXTURE

UNLESS OTHERWISE SPECIFIED DATE

DRAWN BY: AW 9/10/07 ✓ PROJECT NUMBER: PR2186 D PART NUMBER: 048522

CHECKED BY: SCALE: NEXT ASSEMBLY: REQ'D WEIGHT: 4.75 lbmass UPDP REVISION: X

SHEET 3 OF 4

Parts List			
ITEM	PART #	DESCRIPTION	QTY
1	044216	FTG, PLUG #12 SAE	1
2	045948	FTG, 7574051 MAGNETIC PLUG	1
3	046731	SIGHT GLASS SLW-CL-12-SAE	1
4	048690	HOSE, HS-X-3	1
5	048691	HOSE, HS-X-4	1
6	048692	HOSE, HS-X-5	1
7	048714	HOSE, HS-X-27	1
8	048717	HOSE, HS-X-30	1
9	048718	HOSE, HS-X-31	1
10	048719	HOSE, HS-X-32	1
11	048720	HOSE, HS-X-33	1
12	048721	HOSE, HS-X-34	1
13	048723	HOSE, HS-X-36	1
14	048724	HOSE, HS-X-37	1
15	048725	HOSE, HS-X-38	1
16	048726	HOSE, HS-X-39	1
17	048727	HOSE, HS-X-40	1

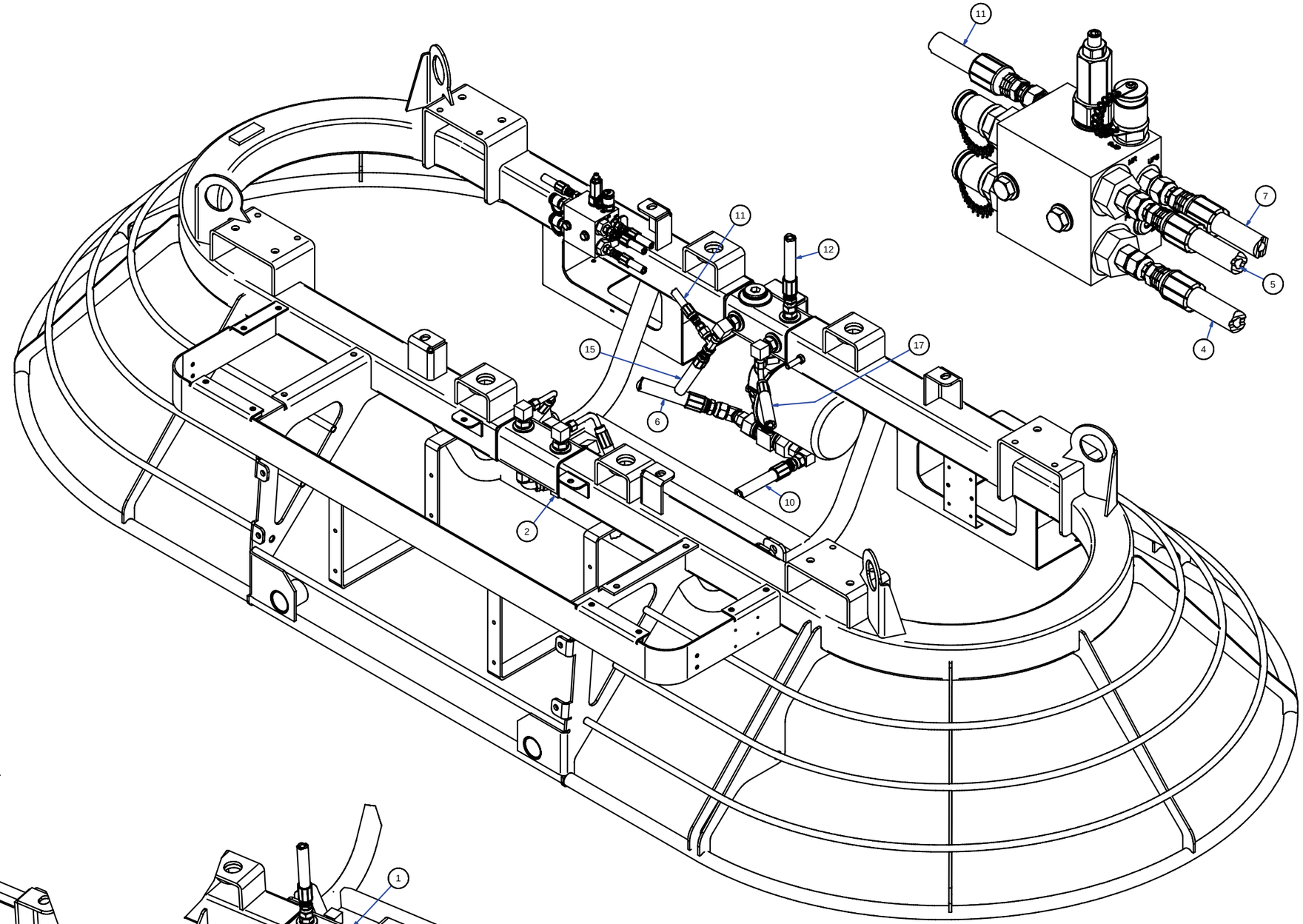

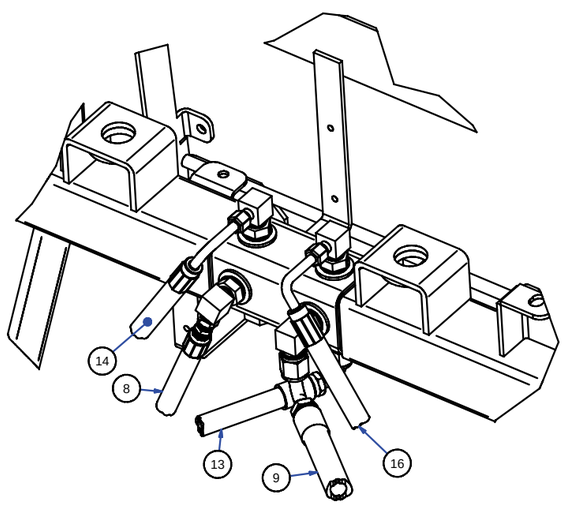

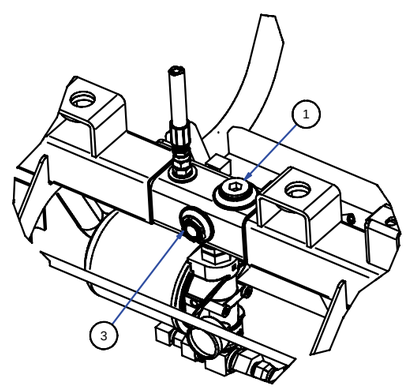

CONFIDENTIAL: INFORMATION CONTAINED HEREIN IS THE CONFIDENTIAL PROPERTY OF ALLEN ENGINEERING CORPORATION AND MUST NOT BE DISCLOSED WITHOUT PERMISSION. PRINTS ARE SUBJECT TO RECALL AND MUST BE RELEASED UPON DEMAND.

allen ENGINEERING CORPORATION
P.O. BOX 819
PARAGOULD, AR 72451

TITLE: Mainframe Hydraulic Plumbing HDX600 Riding Trowel

MATERIAL:

1-PLACE DEC: 2-PLACE DEC: 3-PLACE DEC: ANLR: FRAC: MACHINE SURFACE TEXTURE

UNLESS OTHERWISE SPECIFIED DATE:

DRAWN BY: AW 10/15/07 ✓

PROJECT NUMBER: PR2186 | D | PART NUMBER: 048522

CHECKED BY: SCALE: NEXT ASSEMBLY REQ'D WEIGHT: 228.75 lbmass LFSF: REVISION: X

SHEET 4 OF 4

Parts List			
ITEM	PART #	DESCRIPTION	QTY
1	010002	FSTN, HHCS 1/4-20 X 3/4	12
2	010018	FSTN, HHCS 5/16-18 X 1/2 GR 5	4
3	010020	FSTN, HHCS 5/16-18 X 1	2
4	010021	FSTN, HHCS 5/16-18 X 1-1/4 GR5	4
5	010036	FSTN, HHCS 3/8-16 X 1	2
6	010037	FSTN, HHCS 3/8-16 X 1-1/4 GR 5	2
7	010081	FSTN, FW 1/4	5
8	010082	FSTN, FW 5/16	4
9	010083	FSTN, FW 3/8	6
10	010464	FSTN, NUT NYLOK 3/8-16	6
11	013370	FSTN, RHMS 10-32 X 3/8	1
12	015713	BUSHING, NITRILE	4
13	020514	FSTN, NUT STOVER LOCK 3/8-16	2
14	020542	FSTN, NUT STOVER LOCK 1/4-20	12
15	024984	PIVOT, THROTTLE CABLE	1
16	026226	PIN, Ø3/32 X 3/4 ZP STL COTTER	1
17	028243	CABLE, THROTTLE 52" HD	1
18	032125	SWITCH, ROCKER #91B2184	1
19	034621	HORN, 12 VOLT	1
20	034876	DECAL, LIGHTS	1
21	035365	DECAL, FUSE BOX INSIDE	1
22	036881	LIGHT, PREP F/ RIDING TROWELS	2
23	036932	FUSE BOX, 8 LOCATION	1
24	037777	KIT, FUEL FILLER (D08)	1
25	037785	KEYSWITCH, KUBOTA (E02)	1
26	039048	DECAL, GEN PROTECTION WARNING	1
27	039778	DECAL, GREASE THRUST BEARING DAILY	1
28	040004	NUT, 5/16-18 GR-C STOVER HEX	6
29	040441	DECAL, CRUISE CONTROL	1
30	041537	HOLDER, CUP FOR RIDERS	1
31	042343	FSTN, SFBHCS 1/4"-20 x 3/4	72
32	045866	BRACKET, FAN MOUNT TO COOLER HD530	1
33	046238	AIR/OIL COOLER, C-20	1
34	046919	JOYSTICK, LH SINGLE AXIS	1
35	046920	JOYSTICK, RH DUAL AXIS	1
36	047052	RELAY, WEATHERPROOF	3
37	047200	SEAT, W/ SWITCH (EXTRA FOAM)	1
38	047263	DECAL, DIESEL OVERHEAT CAUTION	1
39	047265	DECAL, HOT COOLANT WARNING	1
40	047372	PLATE INSIDE F/ 500 SEAT FRAME	1
41	047406	GUAGE, LOFA MULTI FUNCTION	1
42	047546	FSTN, 1/4-20 PAL SNAP NUT	70
43	047643	LOCKING CONTROL, QUADRASTAT (Q14020)	1
44	047665	BUMPER, RUBBER F/ SEAT PLATE STOP	3
45	047685	HOURMETER, SENDEC 807-204-0111	1
46	048036	DECAL, ACE LARGE OVAL	1
47	048037	DECAL, ACE SMALL OVAL	1
48	048181	DECAL, CALIFORNIA PRPSTN 65	1
49	048237	ARMREST WITH PIVOT, LH	1
50	048238	ARMREST WITH PIVOT, RH	1
51	048240	BRACKET, LH ARMREST MOUNT	1
52	048241	BRACKET, RH ARMREST MOUNT	1
53	048352	CLAMP, #22 HOSE	2
54	048544	SEAT FRAME, X1 RIDING TROWEL	1
55	048595	TANK, VENT X1	1
56	048599	COVER, SIDE F/ SEAT FRAME X1	2
57	048600	COVER, FRONT CENTER F/ SEAT FRAME X1	1
58	048601	BRACKET, THROTTLE CABLE X1	1
59	048602	COVER, FRONT LH X1	1
60	048603	COVER, REAR LH X1	1
61	048604	BRACKET, FUEL PUMP X1	1
62	048605	COVER, RADIATOR ACCESS X1	1
63	048606	COVER, REAR RH TOP X1	1
64	048607	COVER, REAR BOTTOM RH X1	1
65	048609	COVER, CONTROL PANEL FRONT X1	1
66	048610	COVER, FRONT RH X1	1
67	048665	TUBE, MANUAL PACK	1
68	048666	CLAMP, MANUAL PACK TUBE	2
69	048673	BREATHER, AIR 90° ELBOW X1	1
70	048674	HOOD, INLET (STYLE E) X1	1
71	048675	BAND, POLYMER MOUNTING X1	1
72	048678	HANDLE, LOAD RATED NYLON	2
73	048681	GROMMET, RUBBER 5/8 ID X 1-1/8 OD	2
74	048682	CONNECTOR, HOSE (HUMP) X1	1
75	048728	TUBE, ELBOW/HUMP CONNECTION X1	1
76	048743	DECAL, SIDE HDX600 2"	2
77	048748	ELEMENT, FILTER P821575 (NOT SHOWN)	1

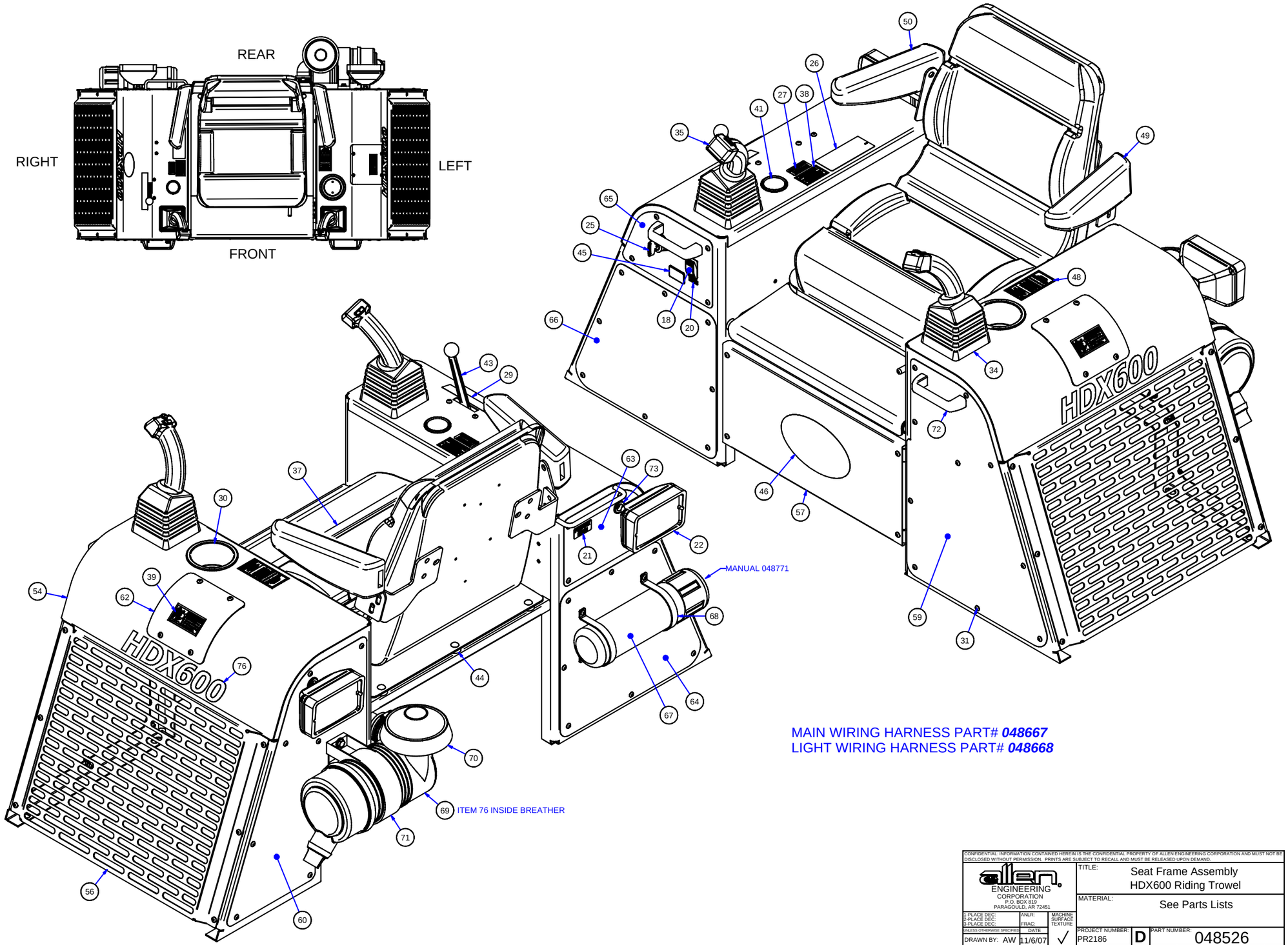

MAIN WIRING HARNESS PART# ***048667***
LIGHT WIRING HARNESS PART# ***048668***

CONFIDENTIAL: INFORMATION CONTAINED HEREIN IS THE CONFIDENTIAL PROPERTY OF ALLEN ENGINEERING CORPORATION AND MUST NOT BE DISCLOSED WITHOUT PERMISSION. PRINTS ARE SUBJECT TO RECALL AND MUST BE RELEASED UPON DEMAND.

allen ENGINEERING CORPORATION
P.O. BOX 819
PARAGOULD, AR 72451

TITLE: Seat Frame Assembly HDX600 Riding Trowel

MATERIAL: See Parts Lists

1-PLACE DEC: 2-PLACE DEC: 3-PLACE DEC: ANLR: FRAC: MACHINE SURFACE TEXTURE

UNLESS OTHERWISE SPECIFIED DATE

DRAWN BY: AW 11/6/07 ✓

PROJECT NUMBER: PR2186 | D | PART NUMBER: 048526

CHECKED BY: | SCALE: | NEXT ASSEMBLY | REQ'D | WEIGHT: 222.44 lbmass | LF/SF | REVISION: X

SHEET 1 OF 3

Parts List			
ITEM	PART #	DESCRIPTION	QTY
1	010002	FSTN, HHCS 1/4-20 X 3/4	12
2	010018	FSTN, HHCS 5/16-18 X 1/2 GR 5	4
3	010020	FSTN, HHCS 5/16-18 X 1	2
4	010021	FSTN, HHCS 5/16-18 X 1-1/4 GR5	4
5	010036	FSTN, HHCS 3/8-16 X 1	2
6	010037	FSTN, HHCS 3/8-16 X 1-1/4 GR 5	2
7	010081	FSTN, FW 1/4	5
8	010082	FSTN, FW 5/16	4
9	010083	FSTN, FW 3/8	6
10	010464	FSTN, NUT NYLOK 3/8-16	6
11	013370	FSTN, RHMS 10-32 X 3/8	1
12	015713	BUSHING, NITRILE	4
13	020514	FSTN, NUT STOVER LOCK 3/8-16	2
14	020542	FSTN, NUT STOVER LOCK 1/4-20	12
15	024984	PIVOT, THROTTLE CABLE	1
16	026226	PIN, Ø3/32 X 3/4 ZP STL COTTER	1
17	028243	CABLE, THROTTLE 52" HD	1
18	032125	SWITCH, ROCKER #91B2184	1
19	034621	HORN, 12 VOLT	1
20	034876	DECAL, LIGHTS	1
21	035365	DECAL, FUSE BOX INSIDE	1
22	036881	LIGHT, PREP F/ RIDING TROWELS	2
23	036932	FUSE BOX, 8 LOCATION	1
24	037777	KIT, FUEL FILLER (D08)	1
25	037785	KEYSWITCH, KUBOTA (E02)	1
26	039048	DECAL, GEN PROTECTION WARNING	1
27	039778	DECAL, GREASE THRUST BEARING DAILY	1
28	040004	NUT, 5/16-18 GR-C STOVER HEX	6
29	040441	DECAL, CRUISE CONTROL	1
30	041537	HOLDER, CUP FOR RIDERS	1
31	042343	FSTN, SFBHCS 1/4"-20 x 3/4	72
32	045866	BRACKET, FAN MOUNT TO COOLER HD530	1
33	046238	AIR/OIL COOLER, C-20	1
34	046919	JOYSTICK, LH SINGLE AXIS	1
35	046920	JOYSTICK, RH DUAL AXIS	1
36	047052	RELAY, WEATHERPROOF	3
37	047200	SEAT, W/ SWITCH (EXTRA FOAM)	1
38	047263	DECAL, DIESEL OVERHEAT CAUTION	1
39	047265	DECAL, HOT COOLANT WARNING	1
40	047372	PLATE INSIDE F/ 500 SEAT FRAME	1
41	047406	GUAGE, LOFA MULTI FUNCTION	1
42	047546	FSTN, 1/4-20 PAL SNAP NUT	70
43	047643	LOCKING CONTROL, QUADRASTAT (Q14020)	1
44	047665	BUMPER, RUBBER F/ SEAT PLATE STOP	3
45	047685	HOURMETER, SENDEC 807-204-0111	1
46	048036	DECAL, ACE LARGE OVAL	1
47	048037	DECAL, ACE SMALL OVAL	1
48	048181	DECAL, CALIFORNIA PRPSTN 65	1
49	048237	ARMREST WITH PIVOT, LH	1
50	048238	ARMREST WITH PIVOT, RH	1
51	048240	BRACKET, LH ARMREST MOUNT	1
52	048241	BRACKET, RH ARMREST MOUNT	1
53	048352	CLAMP, #22 HOSE	2
54	048544	SEAT FRAME, X1 RIDING TROWEL	1
55	048595	TANK, VENT X1	1
56	048599	COVER, SIDE F/ SEAT FRAME X1	2
57	048600	COVER, FRONT CENTER F/ SEAT FRAME X1	1
58	048601	BRACKET, THROTTLE CABLE X1	1
59	048602	COVER, FRONT LH X1	1
60	048603	COVER, REAR LH X1	1
61	048604	BRACKET, FUEL PUMP X1	1
62	048605	COVER, RADIATOR ACCESS X1	1
63	048606	COVER, REAR RH TOP X1	1
64	048607	COVER, REAR BOTTOM RH X1	1
65	048609	COVER, CONTROL PANEL FRONT X1	1
66	048610	COVER, FRONT RH X1	1
67	048665	TUBE, MANUAL PACK	1
68	048666	CLAMP, MANUAL PACK TUBE	2
69	048673	BREATHER, AIR 90° ELBOW X1	1
70	048674	HOOD, INLET (STYLE E) X1	1
71	048675	BAND, POLYMER MOUNTING X1	1
72	048678	HANDLE, LOAD RATED NYLON	2
73	048681	GROMMET, RUBBER 5/8 ID X 1-1/8 OD	2
74	048682	CONNECTOR, HOSE (HUMP) X1	1
75	048728	TUBE, ELBOW/HUMP CONNECTION X1	1
76	048743	DECAL, SIDE HDX600 2"	2
77	048748	ELEMENT, FILTER P821575 (NOT SHOWN)	1

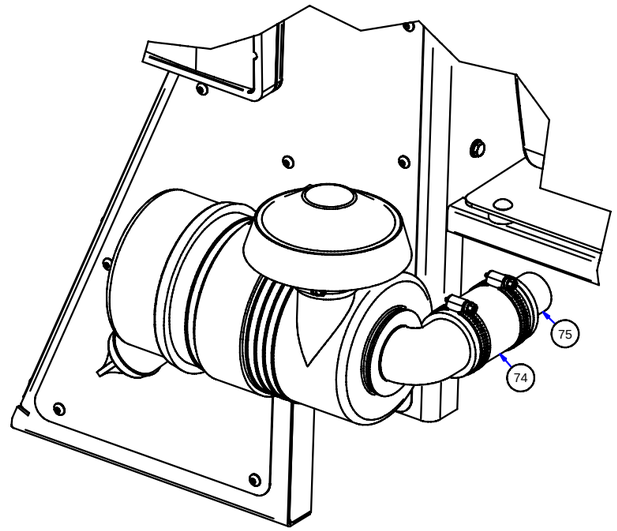

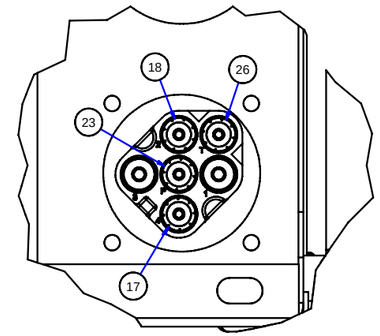

LEFT JOYSTICK

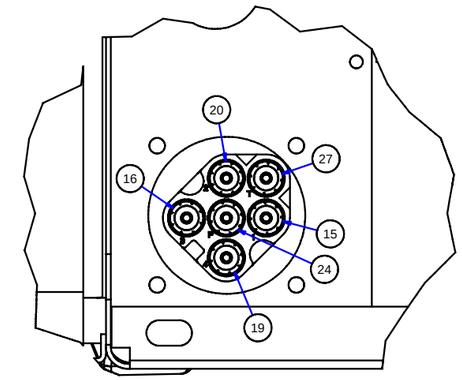

RIGHT JOYSTICK

Hose and Fitting Parts List			
ITEM	PART #	DESCRIPTION	QTY
1	045843	FAN, ELECT. PUSHER	1
2	045866	BRACKET, FAN MOUNT TO COOLER HD530	1
3	045922	FTG., F6400-4-6-O	1
4	046238	AIR/OIL COOLER, C-20	1
5	046349	FTG, F6400-6-8-O STR	1
6	046919	JOYSTICK, LH SINGLE AXIS	1
7	046920	JOYSTICK, RH DUAL AXIS	1
8	047886	CAP, FILLER BREATHER SPB-S-1-10-N04	1
9	048329	FTG, F6400-4-4-O STR	11
10	048595	TANK, VENT X1	1
11	048693	HOSE, HS-X-6	1
12	048694	HOSE, HS-X-7	1
13	048695	HOSE, HS-X-8	1
14	048696	HOSE, HS-X-9	1
15	048701	HOSE, HS-X-14	1
16	048702	HOSE, HS-X-15	1
17	048703	HOSE, HS-X-16	1
18	048704	HOSE, HS-X-17	1
19	048705	HOSE, HS-X-18	1
20	048706	HOSE, HS-X-19	1
21	048707	HOSE- HS-X-20	1
22	048709	HOSE, HS-X-22	1
23	048710	HOSE, HS-X-23	1
24	048711	HOSE, HS-X-24	1
25	048721	HOSE, HS-X-34	1
26	048724	HOSE, HS-X-37	1
27	048726	HOSE, HS-X-39	1
28	048732	FTG., F6804-12-12-12-NWO	1
29	048741	FTG., F6804-12-12-12-NWO-2P5	1

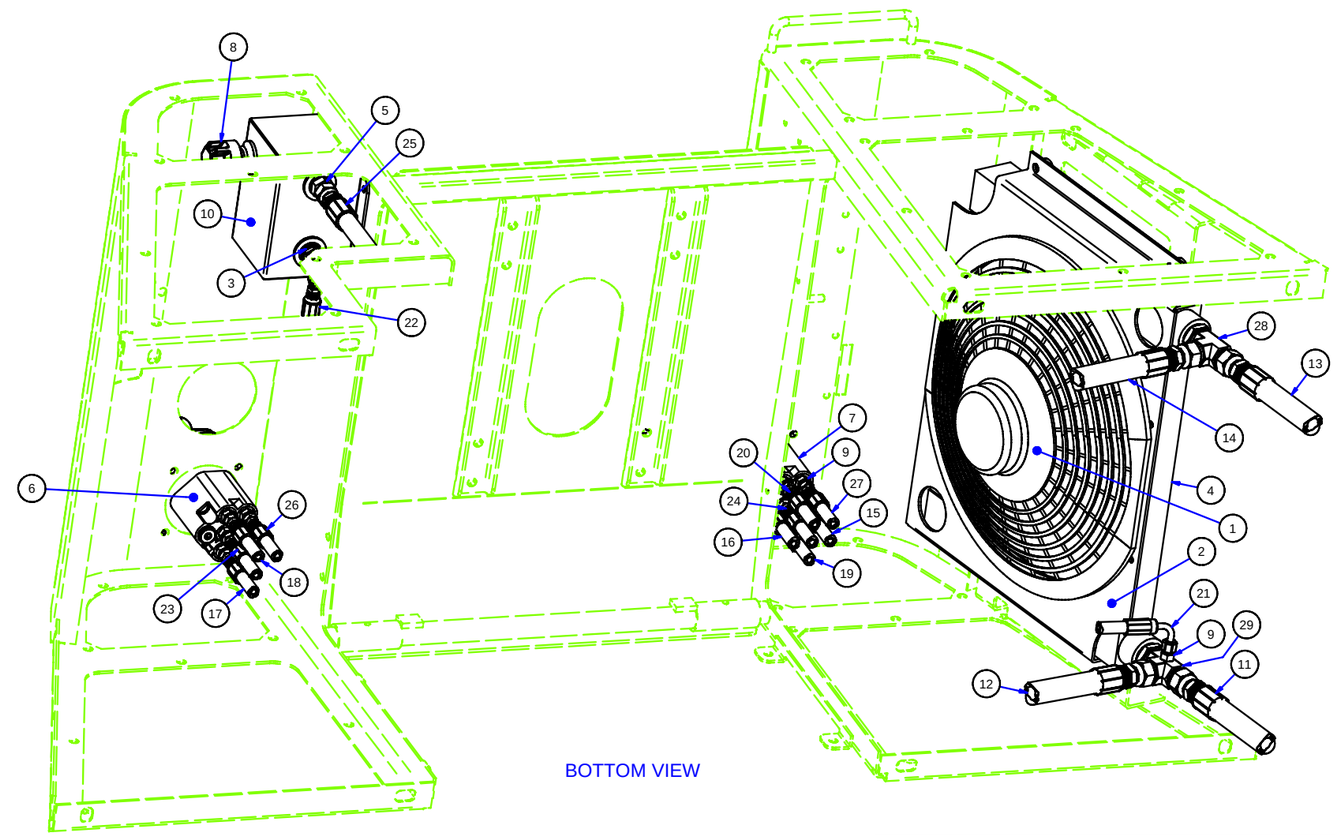

BOTTOM VIEW

CONFIDENTIAL: INFORMATION CONTAINED HEREIN IS THE CONFIDENTIAL PROPERTY OF ALLEN ENGINEERING CORPORATION AND MUST NOT BE DISCLOSED WITHOUT PERMISSION. PRINTS ARE SUBJECT TO RECALL AND MUST BE RELEASED UPON DEMAND.

allen ENGINEERING CORPORATION
P.O. BOX 819
PARAGOULD, AR 72451

TITLE: Seat Frame Assembly HDX600 Riding Trowel

MATERIAL: See Parts Lists

1-PLACE DEC: 2-PLACE DEC: 3-PLACE DEC: ANLR: FRAC: MACHINE SURFACE TEXTURE

UNLESS OTHERWISE SPECIFIED DATE

DRAWN BY: AW 11/6/07 ✓

PROJECT NUMBER: PR2186 | D | PART NUMBER: 048526

CHECKED BY: SCALE: NEXT ASSEMBLY REQ'D WEIGHT: 222.44 lbmass UPDF REVISION X

SHEET 2 OF 3

Parts List			
ITEM	PART #	DESCRIPTION	QTY
1	010002	FSTN, HHCS 1/4-20 X 3/4	12
2	010018	FSTN, HHCS 5/16-18 X 1/2 GR 5	4
3	010020	FSTN, HHCS 5/16-18 X 1	2
4	010021	FSTN, HHCS 5/16-18 X 1-1/4 GR5	4
5	010036	FSTN, HHCS 3/8-16 X 1	2
6	010037	FSTN, HHCS 3/8-16 X 1-1/4 GR 5	2
7	010081	FSTN, FW 1/4	5
8	010082	FSTN, FW 5/16	4
9	010083	FSTN, FW 3/8	6
10	010464	FSTN, NUT NYLOK 3/8-16	6
11	013370	FSTN, RHMS 10-32 X 3/8	1
12	015713	BUSHING, NITRILE	4
13	020514	FSTN, NUT STOVER LOCK 3/8-16	2
14	020542	FSTN, NUT STOVER LOCK 1/4-20	12
15	024984	PIVOT, THROTTLE CABLE	1
16	026226	PIN, Ø3/32 X 3/4 ZP STL COTTER	1
17	028243	CABLE, THROTTLE 52" HD	1
18	032125	SWITCH, ROCKER #91B2184	1
19	034621	HORN, 12 VOLT	1
20	034876	DECAL, LIGHTS	1
21	035365	DECAL, FUSE BOX INSIDE	1
22	036881	LIGHT, PREP F/ RIDING TROWELS	2
23	036932	FUSE BOX, 8 LOCATION	1
24	037777	KIT, FUEL FILLER (D08)	1
25	037785	KEYSWITCH, KUBOTA (E02)	1
26	039048	DECAL, GEN PROTECTION WARNING	1
27	039778	DECAL, GREASE THRUST BEARING DAILY	1
28	040004	NUT, 5/16-18 GR-C STOVER HEX	6
29	040441	DECAL, CRUISE CONTROL	1
30	041537	HOLDER, CUP FOR RIDERS	1
31	042343	FSTN, SFBHCS 1/4"-20 x 3/4	72
32	045866	BRACKET, FAN MOUNT TO COOLER HD530	1
33	046238	AIR/OIL COOLER, C-20	1
34	046919	JOYSTICK, LH SINGLE AXIS	1
35	046920	JOYSTICK, RH DUAL AXIS	1
36	047052	RELAY, WEATHERPROOF	3
37	047200	SEAT, W/ SWITCH (EXTRA FOAM)	1
38	047263	DECAL, DIESEL OVERHEAT CAUTION	1
39	047265	DECAL, HOT COOLANT WARNING	1
40	047372	PLATE INSIDE F/ 500 SEAT FRAME	1
41	047406	GUAGE, LOFA MULTI FUNCTION	1
42	047546	FSTN, 1/4-20 PAL SNAP NUT	70
43	047643	LOCKING CONTROL, QUADRASTAT (Q14020)	1
44	047665	BUMPER, RUBBER F/ SEAT PLATE STOP	3
45	047685	HOURMETER, SENDEC 807-204-0111	1
46	048036	DECAL, ACE LARGE OVAL	1
47	048037	DECAL, ACE SMALL OVAL	1
48	048181	DECAL, CALIFORNIA PRPSTN 65	1
49	048237	ARMREST WITH PIVOT, LH	1
50	048238	ARMREST WITH PIVOT, RH	1
51	048240	BRACKET, LH ARMREST MOUNT	1
52	048241	BRACKET, RH ARMREST MOUNT	1
53	048352	CLAMP, #22 HOSE	2
54	048544	SEAT FRAME, X1 RIDING TROWEL	1
55	048595	TANK, VENT X1	1
56	048599	COVER, SIDE F/ SEAT FRAME X1	2
57	048600	COVER, FRONT CENTER F/ SEAT FRAME X1	1
58	048601	BRACKET, THROTTLE CABLE X1	1
59	048602	COVER, FRONT LH X1	1
60	048603	COVER, REAR LH X1	1
61	048604	BRACKET, FUEL PUMP X1	1
62	048605	COVER, RADIATOR ACCESS X1	1
63	048606	COVER, REAR RH TOP X1	1
64	048607	COVER, REAR BOTTOM RH X1	1
65	048609	COVER, CONTROL PANEL FRONT X1	1
66	048610	COVER, FRONT RH X1	1
67	048665	TUBE, MANUAL PACK	1
68	048666	CLAMP, MANUAL PACK TUBE	2
69	048673	BREATHER, AIR 90° ELBOW X1	1
70	048674	HOOD, INLET (STYLE E) X1	1
71	048675	BAND, POLYMER MOUNTING X1	1
72	048678	HANDLE, LOAD RATED NYLON	2
73	048681	GROMMET, RUBBER 5/8 ID X 1-1/8 OD	2
74	048682	CONNECTOR, HOSE (HUMP) X1	1
75	048728	TUBE, ELBOW/HUMP CONNECTION X1	1
76	048743	DECAL, SIDE HDX600 2"	2
77	048748	ELEMENT, FILTER P821575 (NOT SHOWN)	1

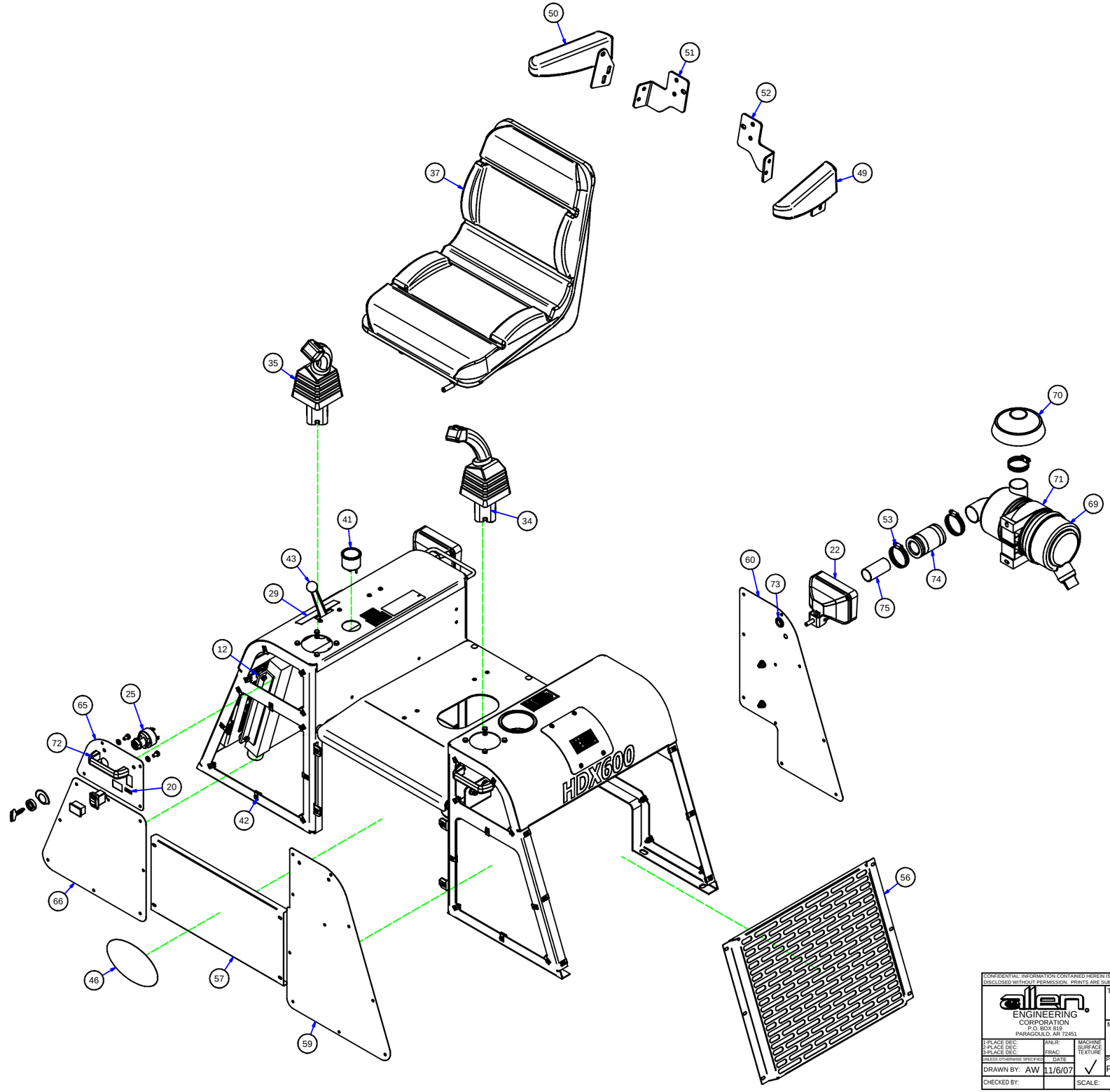

CONFIDENTIAL: INFORMATION CONTAINED HEREIN IS THE CONFIDENTIAL PROPERTY OF ALLEN ENGINEERING CORPORATION AND MUST NOT BE DISCLOSED WITHOUT PERMISSION. PRINTS ARE SUBJECT TO RECALL AND MUST BE RELEASED UPON DEMAND.

allen ENGINEERING CORPORATION
P.O. BOX 819
PARAGOULD, AR 72451

TITLE: Seat Frame Assembly HDX600 Riding Trowel

MATERIAL: See Parts Lists

1-PLACE DEC: 2-PLACE DEC: 3-PLACE DEC: ANLR: FRAC: MACHINE SURFACE TEXTURE

UNLESS OTHERWISE SPECIFIED DATE

DRAWN BY: AW 11/6/07

PROJECT NUMBER: PR2186

D

PART NUMBER: 048526

CHECKED BY: SCALE: NEXT ASSEMBLY REQ'D WEIGHT: 222.44 lbmass UNIT REVISION: X

SHEET 3 OF 3

Parts List			
ITEM	PART #	DESCRIPTION	QTY
1	010024	FSTN, HHCS 5/16-18 X 2 GR 5	15
2	010036	FSTN, HHCS 3/8-16 X 1	4
3	010068	FSTN, HHCS 1/2-13 X 1-1/4 GR 5	6
4	010069	FSTN, HHCS 1/2-13 X 1-1/2	2
5	010090	FSTN, LW 5/16	15
6	010091	FSTN, LW 3/8	4
7	011490	FSTN, FW HARDENED 1/2	8
8	015677	FSTN, RING RETAINING (E-CLIP)	2
9	015691	FSTN, SHCS 1/2-13 X 1-1/2 RH	1
10	015692	CAP, Ø1/4 RED GREASE	5
11	015693	PLUG, PLASTIC CAP EC12	1
12	015694	PLUG W-1 RED PLASTIC TAPERED	5
13	020688	FSTN, NUT HEX JAM 5/8-18 RH	3
14	025091	FSTN, SHLD BLT 3/8 X 3/8 HOLO	5
15	025092	BUSHING, 3/8x1/2x5/16 BRONZE	5
16	027969	FSTN, HHCS 5/8-18 X 2 GR 8	1
17	037532	TROWEL BLADE,FLT FIN 8x18 GOLD 1"BAR	5
18	037652	WASHER, RETAINING HD	1
19	039685	BEARING, BALL THRUST EW2	1
20	039687	PLATE, SHD PRESSURE	1
21	040208	FSTN, NUT STOVER LOCK 1/2-13	8
22	040794	SPIDER ASSY, 1200-5 SHD LH-SOM	1
23	040833	RING, PURCH 1200VG SD 5 BL STAB	1
24	043124	ROD, END MALE 5/8 (AM-10Z)	1
25	043125	ROD END, 5/8 FEMALE	3
26	043269	FSTN, NUT STOVER 5/8-18	8
27	045922	FTG., F6400-4-6-O	2
28	045923	FTG, F6801-4-6-NWO 90° ELB	4
29	047187	CAP, PRESSURE PLATE	1
30	047354	FSTN, HHCS 5/8-18x2-1/4 GR8 YZPLT	1
31	048339	FSTN, HHCS 5/8-18 x 3 GR 8	2
32	048561	BEARING ASSEMBLY F/ ROTOR MOUNT X1	2
33	048611	MOUNT, LH HYD MOTOR X1	1
34	048622	CROSSHEAD, WELDMENT X1	1
35	048624	CHANNEL, STEERING CONNECTOR X1	2
36	048627	SPACER, STEERING CYLINDER X1	4
37	048628	PIN, YOKE X1	1
38	048631	ARM, YOKE X1	1
39	048654	MOTOR, HYDRAULIC LH (WHITE) X1	1
40	048659	CYLINDER, PITCH X1	1
41	048660	CYLINDER, L/R STEERING X1	1
42	048661	CYLINDER, F/R STEERING X1	1
43	048687	MOUNT, MOTOR D9 WELDMENT X1	1
44	048699	HOSE, HS-X-12	1
45	048700	HOSE, HS-X-13	1
46	048701	HOSE, HS-X-14	1
47	048702	HOSE, HS-X-15	1
48	048703	HOSE, HS-X-16	1
49	048704	HOSE, HS-X-17	1
50	048747	ROD, END MALE 5/8 X1 MODIFIED	1

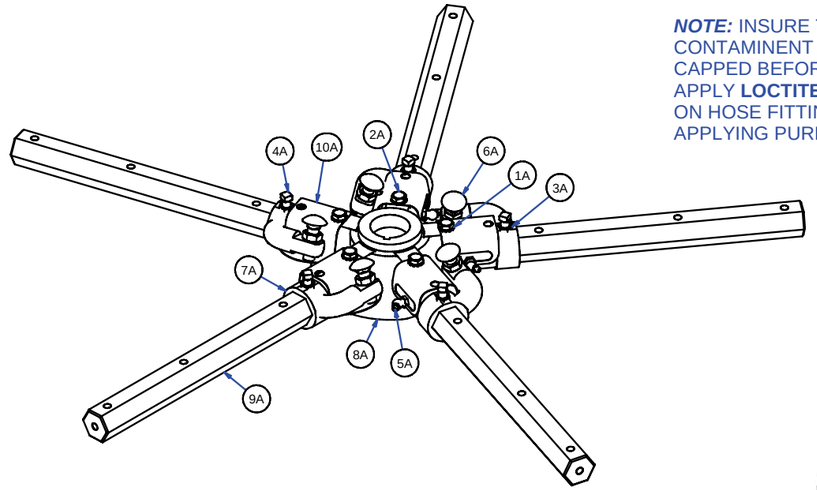

040794 - LH (SOM) Spider Assembly Parts List			
ITEM	PART #	DESCRIPTION	QTY
1A	015682	FSTN, LW EXT STAR 3/8	5
2A	015683	FSTN, 3/8-16 X 7/8 DOG CAP SCREW	5
3A	015684	FSTN, NUT HEX JAM 3/8-16	10
4A	015686	FSTN, SQHSS 3/8-16 X 1	5
5A	024755	FITTING, 1/8-27 NPT 45° GREASE	5
6A	028216	FSTN, CABLT 1/2-13 X 1-1/2 GR8	5
7A	033034	LEVER, LIFT SD UNIVERSAL	5
8A	040698	SPIDER RH 5 BOSS CW ROTATION 46-48"	1
9A	040700	TROWEL ARM F/46" 5 BOSS SPIDER ASSY	5
10A	040792	SPRING CLIP, 46-48" UNIVERSAL SPIDER	5

NOTE: INSURE THAT ALL HOSES ARE CONTAMINENT FREE AND HAVE BEEN CAPPED BEFORE INSTALLATION. ALSO APPLY **LOCTITE® 7452 ACCELERATOR** ON HOSE FITTING THREADS BEFORE APPLYING PURPLE LOCTITE®

USE PURPLE LOCTITE® 545

ALL HOSE FITTINGS

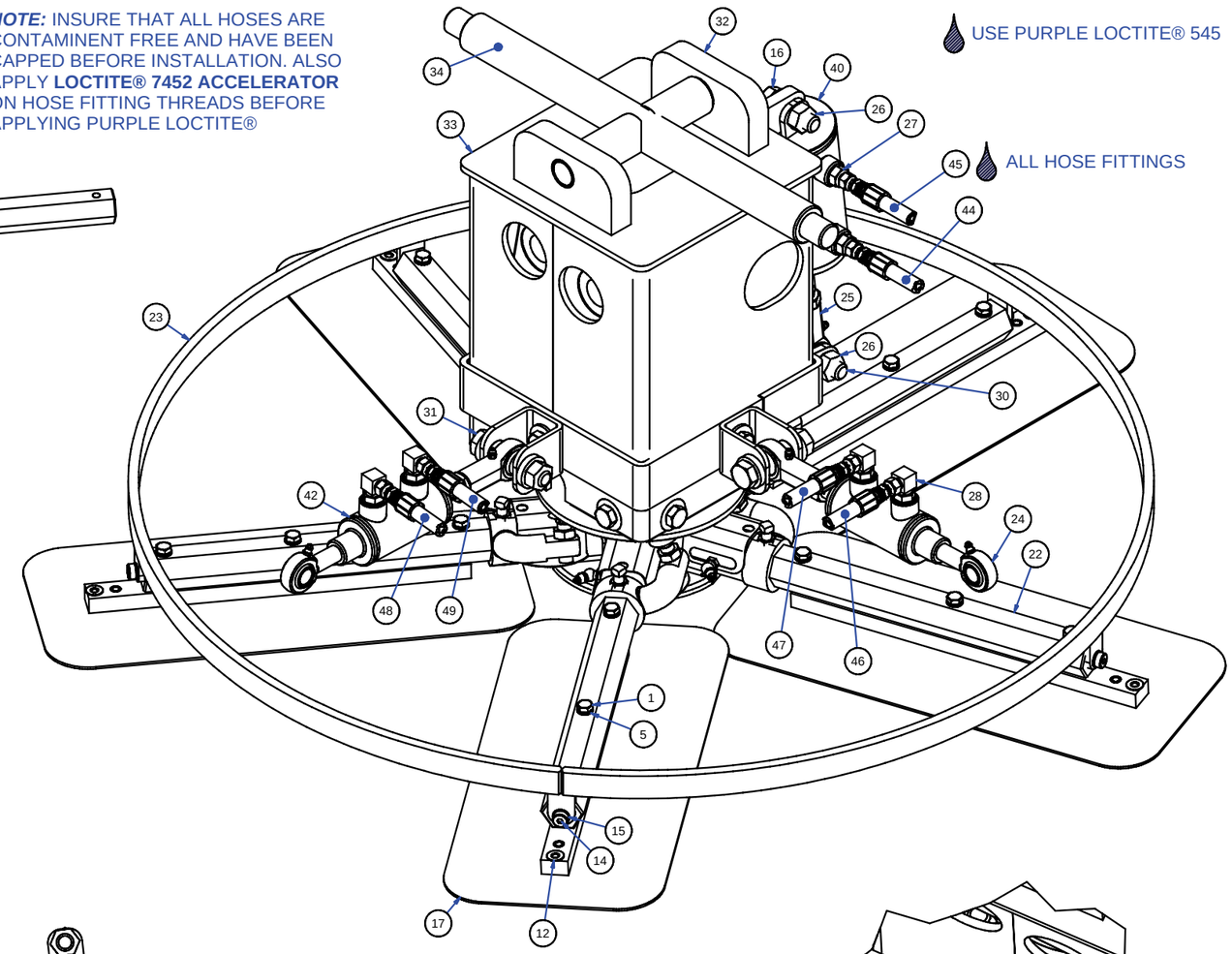

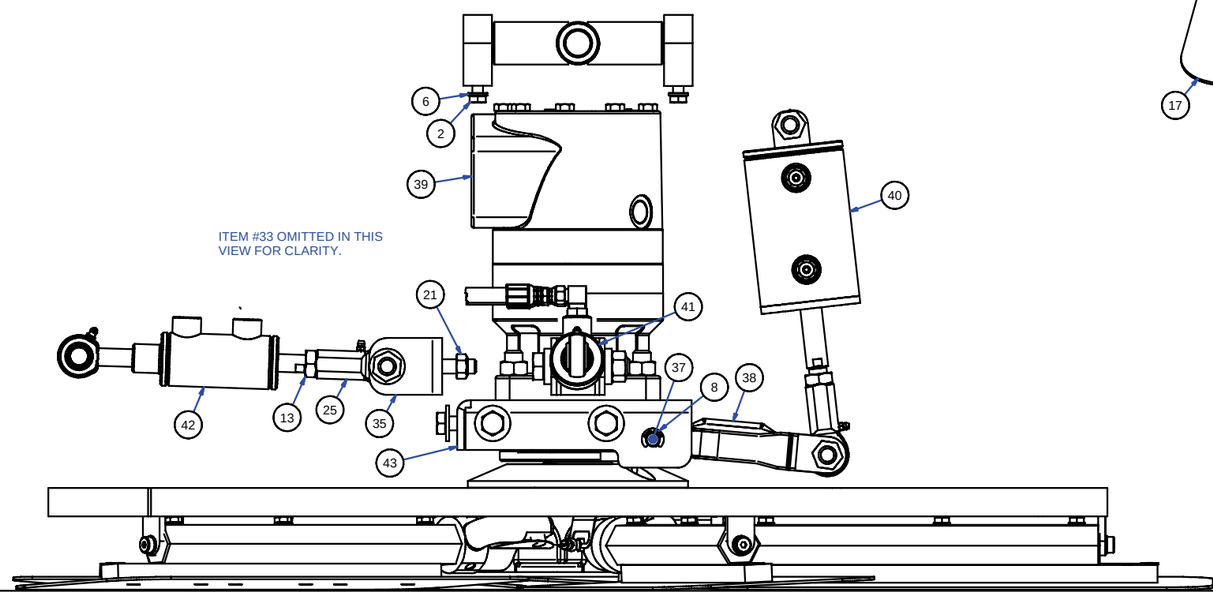

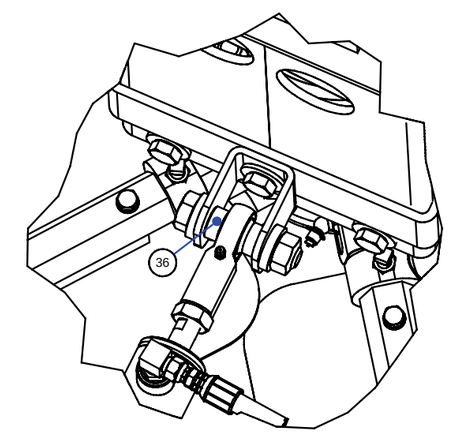

CONFIDENTIAL: INFORMATION CONTAINED HEREIN IS THE CONFIDENTIAL PROPERTY OF ALLEN ENGINEERING CORPORATION AND MUST NOT BE DISCLOSED WITHOUT PERMISSION. PRINTS ARE SUBJECT TO RECALL AND MUST BE RELEASED UPON DEMAND.

allen ENGINEERING CORPORATION
P.O. BOX 819
PARAGOULD, AR 72451

TITLE: LH (SOM) Rotor Assembly HDX600 Riding Trowel

MATERIAL: See Parts Lists

1-PLACE DEC: 2-PLACE DEC: 3-PLACE DEC: ANLR: FRAC: MACHINE SURFACE TEXTURE

UNLESS OTHERWISE SPECIFIED DATE: DRAWN BY: AW 11/13/07 ✓

PROJECT NUMBER: PR2186 | D | PART NUMBER: 048647

CHECKED BY: SCALE: NEXT ASSEMBLY REQ'D WEIGHT: 156.33 lbmass LFISF: REVISION: X

SHEET 1 OF 2

LH (SOM) Rotor Motor Parts List			
ITEM	PART #	DESCRIPTION	QTY
1A	027969	FSTN, HHCS 5/8-18 X 2 GR 8	4
2A	043269	FSTN, NUT STOVER 5/8-18	4
3A	046349	FTG, F6400-6-8-O STR	1
4A	046981	FTG, F6500-6-6-O 90° ELB	1
5A	046983	FTG, F6400-10-16-O STR	2
6A	048654	MOTOR, HYDRAULIC LH (WHITE) X1	1
7A	048687	MOUNT, MOTOR D9 WELDMENT X1	1

LH Rotor Assembly Breakdown Parts List			
ITEM	PART #	DESCRIPTION	QTY
1B	010513	FITTING, 1/4-28 NPT STR GREASE	1
2B	015691	FSTN, SHCS 1/2-13 X 1-1/2 RH	1
3B	015693	PLUG, PLASTIC CAP EC12	1
4B	037652	WASHER, RETAINING HD	1
5B	039685	BEARING, BALL THRUST EW2	1
6B	039687	PLATE, SHD PRESSURE	1
7B	040794	SPIDER ASSY, 1200-5 SHD LH-SOM	1
8B	047187	* CAP, PRESSURE PLATE	1
9B	201163	FITTING, 1/8-27 PTF STR GREASE	1

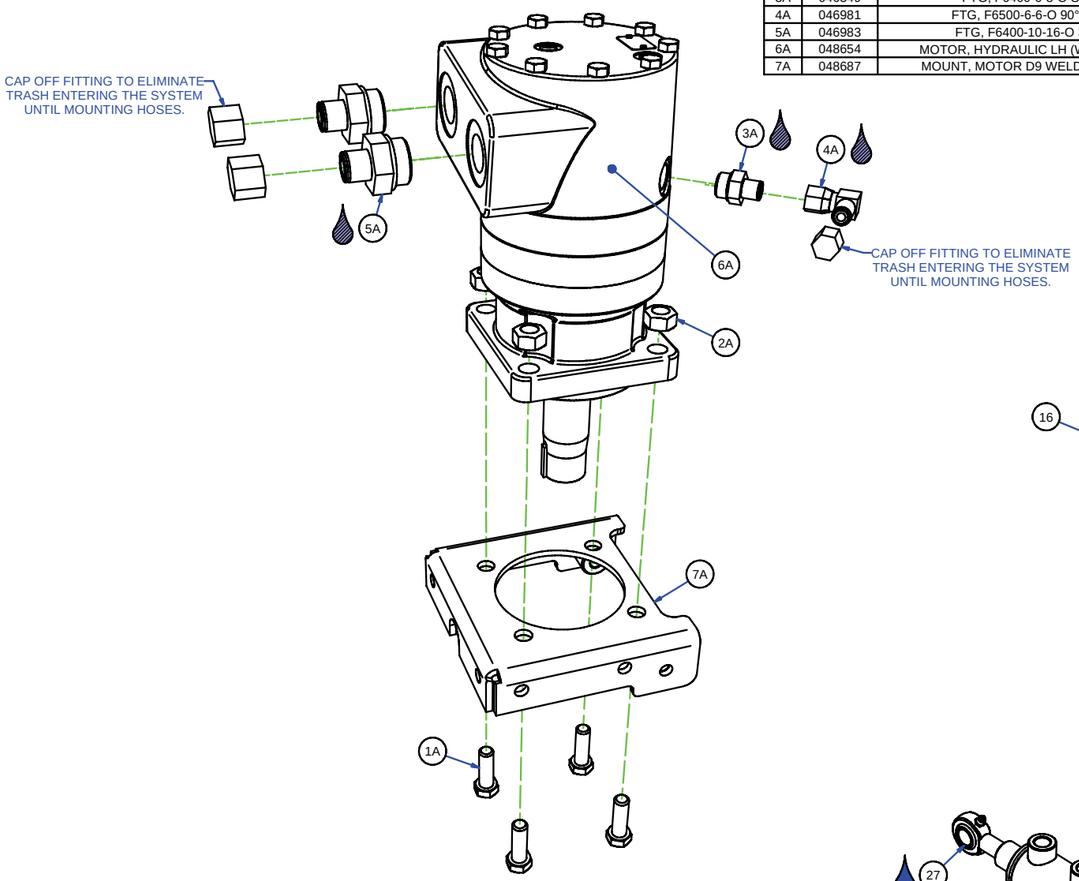

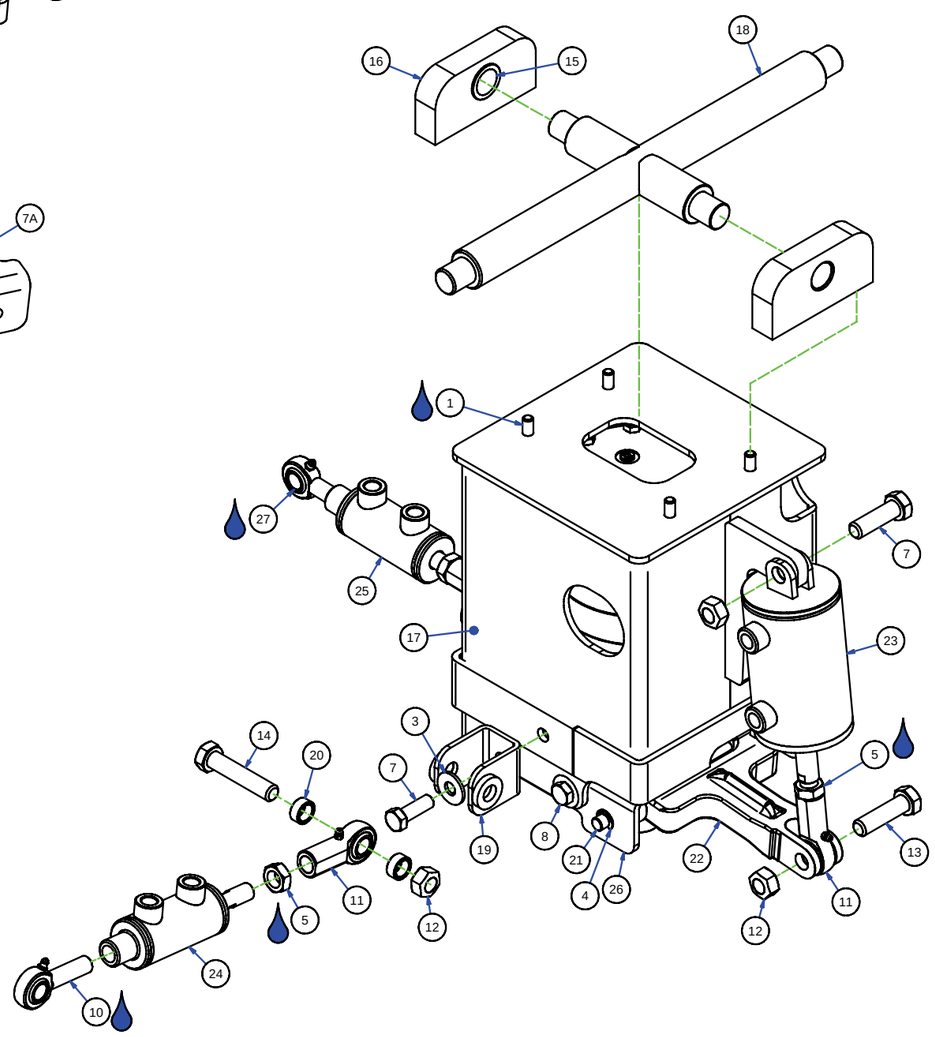

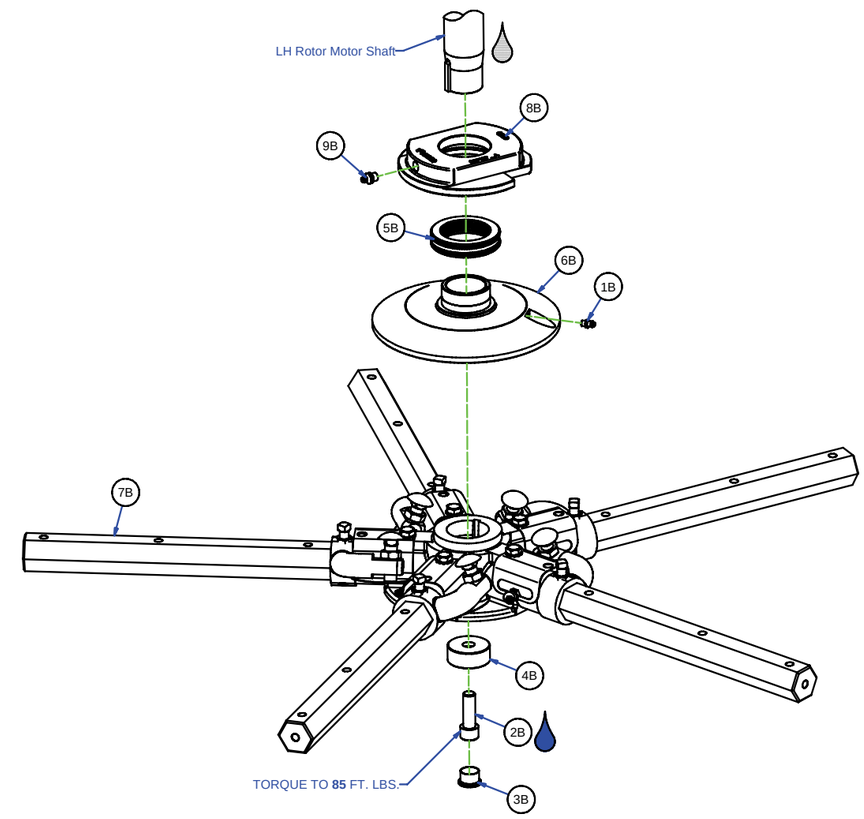

LH (SOM) Rotor Assembly Parts List			
ITEM	PART #	DESCRIPTION	QTY
1	010036	FSTN, HHCS 3/8-16 X 1	4
2	010091	FSTN, LW 3/8	4
3	011490	FSTN, FW HARDENED 1/2	8
4	015677	FSTN, RING RETAINING (E-CLIP)	2
5	020688	FSTN, NUT HEX JAM 5/8-18 RH	3
6	027969	FSTN, HHCS 5/8-18 X 2 GR 8	1
7	037798	FSTN, HHCS 1/2-13 X 1 1/2 GR8	2
8	038508	FSTN, HHCS 1/2-13 X 1-1/4 GR 8	6
9	040208	FSTN, NUT STOVER LOCK 1/2-13	8
10	043124	ROD, END MALE 5/8 (AM-10Z)	1
11	043125	ROD END, 5/8 FEMALE	3
12	043269	FSTN, NUT STOVER 5/8-18	8
13	047354	FSTN, HHCS 5/8-18x2-1/4 GR8 YZPLT	1
14	048339	FSTN, HHCS 5/8-18 x 3 GR 8	2
15	048560	BEARING, I-GLIDE FLANGED T500	2
16	048561	BEARING ASSEMBLY F/ ROTOR MOUNT X1	2
17	048611	MOUNT, LH HYD MOTOR X1	1
18	048622	CROSSHEAD, WELDMENT X1	1
19	048624	CHANNEL, STEERING CONNECTOR X1	2
20	048627	SPACER, STEERING CYLINDER X1	4
21	048628	PIN, YOKE ARM	1
22	048631	ARM, YOKE X1	1
23	048659	CYLINDER, PITCH X1	1
24	048660	CYLINDER, L/R STEERING X1	1
25	048661	CYLINDER, F/R STEERING X1	1
26	048687	MOUNT, MOTOR D9 WELDMENT X1	1
27	048747	ROD, END MALE 5/8 X1 MODIFIED	1

USE LOCTITE® SILVER-GRADE ANTI-SIEZE (REF. 76764)

USE PURPLE LOCTITE® 545

USE BLUE LOCTITE® 242

CONFIDENTIAL: INFORMATION CONTAINED HEREIN IS THE CONFIDENTIAL PROPERTY OF ALLEN ENGINEERING CORPORATION AND MUST NOT BE DISCLOSED WITHOUT PERMISSION. PRINTS ARE SUBJECT TO RECALL AND MUST BE RELEASED UPON DEMAND.

allen ENGINEERING CORPORATION
P.O. BOX 819
PARAGOULD, AR 72451

TITLE: LH (SOM) Rotor Assembly HDX600 Riding Trowel

MATERIAL: See Parts Lists

1-PLACE DEC: 2-PLACE DEC: 3-PLACE DEC: ANLR: FRAC: MACHINE SURFACE TEXTURE

UNLESS OTHERWISE SPECIFIED DATE

DRAWN BY: AW 11/13/07 ✓

CHECKED BY: SCALE: NEXT ASSEMBLY

PROJECT NUMBER: PR2186 D PART NUMBER: 048647

REQ'D WEIGHT: 15.96 lbmass LF/SF REVISION: X

SHEET 2 OF 2

Parts List			
ITEM	PART #	DESCRIPTION	QTY
1	010024	FSTN, HHCS 5/16-18 X 2 GR 5	15
2	010090	FSTN, LW 5/16	15
3	011490	FSTN, FW HARDENED 1/2	7
4	015677	FSTN, RING RETAINING (E-CLIP)	2
5	015692	CAP, Ø1/4 RED GREASE	3
6	015693	PLUG, PLASTIC CAP EC12	1
7	015694	PLUG W-1 RED PLASTIC TAPERED	5
8	020155	SCR, 1/2-13 X 1-1/2 LH SHCS	1
9	020688	FSTN, NUT HEX JAM 5/8-18 RH	2
10	025091	FSTN, SHLD BLT 3/8 X 3/8 HOLO	5
11	025092	BUSHING, 3/8x1/2x5/16 BRONZE	5
12	027969	FSTN, HHCS 5/8-18 X 2 GR 8	1
13	037532	TROWEL BLADE,FLT FIN 8x18 GOLD 1"BAR	5
14	037652	WASHER, RETAINING HD	1
15	037798	FSTN, HHCS 1/2-13 X 1 1/2 GR8	1
16	038508	FSTN, HHCS 1/2-13 X 1 1/4 GR 8	6
17	039685	BEARING, BALL THRUST EW2	1
18	039687	PLATE, SHD PRESSURE	1
19	040208	FSTN, NUT STOVER LOCK 1/2-13	7
20	040795	SPIDER ASSY, 1200-5 SHD RH-SOM	1
21	040833	RING, PURCH 1200VG SD 5 BL STAB	1
22	043125	ROD END, 5/8 FEMALE	2
23	043269	FSTN, NUT STOVER 5/8-18	7
24	045922	FTG, F6400-4-6-O	2
25	045923	FTG, F6801-4-6-NWO 90° ELB	2
26	047187	CAP, PRESSURE PLATE	1
27	047354	FSTN, HHCS 5/8-18x2-1/4 GR8 YZPLT	1
28	048618	MOUNT, RH HYD MOTOR X1	1
29	048624	CHANNEL, STEERING CONNECTOR X1	1
30	048627	SPACER, STEERING CYLINDER X1	2
31	048628	PIN, YOKE ARM	1
32	048629	FSTN, HHCS 5/8-18 x 2 3/4 GR 8	1
33	048631	ARM, YOKE X1	1
34	048655	MOTOR, HYDRAULIC RH (WHITE) X1	1
35	048659	CYLINDER, PITCH X1	1
36	048661	CYLINDER, F/R STEERING X1	1
37	048687	MOUNT, MOTOR D9 WELDMENT X1	1
38	048697	HOSE, HS-X-10	1
39	048698	HOSE, HS-X-11	1
40	048705	HOSE, HS-X-18	1
41	048706	HOSE, HS-X-19	1
42	048747	ROD, END MALE 5/8 X1 MODIFIED	1

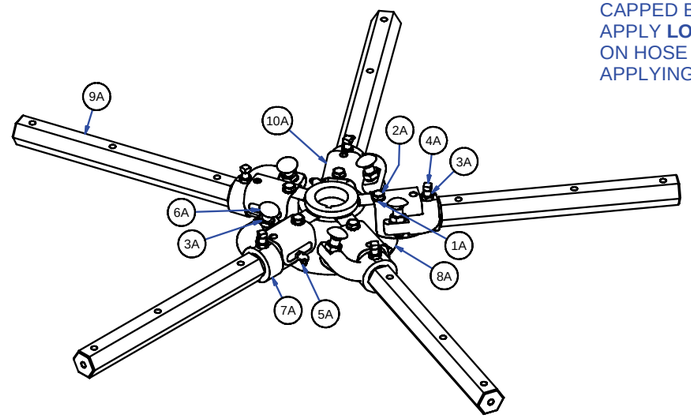

040795 - RH (SOM) Spider Assembly Parts List			
ITEM	PART #	DESCRIPTION	QTY
1A	015682	FSTN, LW EXT STAR 3/8	5
2A	015683	FSTN, 3/8-16 X 7/8 DOG CAP SCREW	5
3A	015684	FSTN, NUT HEX JAM 3/8-16	10
4A	015686	FSTN, SQHSS 3/8-16 X 1	5
5A	024755	FITTING,1/8-27 NPT 45° GREASE	5
6A	028216	FSTN, CABLT 1/2-13 X 1-1/2 GR8	5
7A	033034	LEVER, LIFT SD UNIVERSAL	5
8A	040699	SPIDER,LH 5 BOSS CCW ROTATION 46-48"	1
9A	040700	TROWEL ARM F/46" 5 BOSS SPIDER ASSY	5
10A	040792	SPRING CLIP, 46-48" UNIVERSAL SPIDER	5

NOTE: INSURE THAT ALL HOSES ARE CONTAMINENT FREE AND HAVE BEEN CAPPED BEFORE INSTALLATION. ALSO APPLY **LOCTITE® 7452 ACCELERATOR** ON HOSE FITTING THREADS BEFORE APPLYING PURPLE LOCTITE®

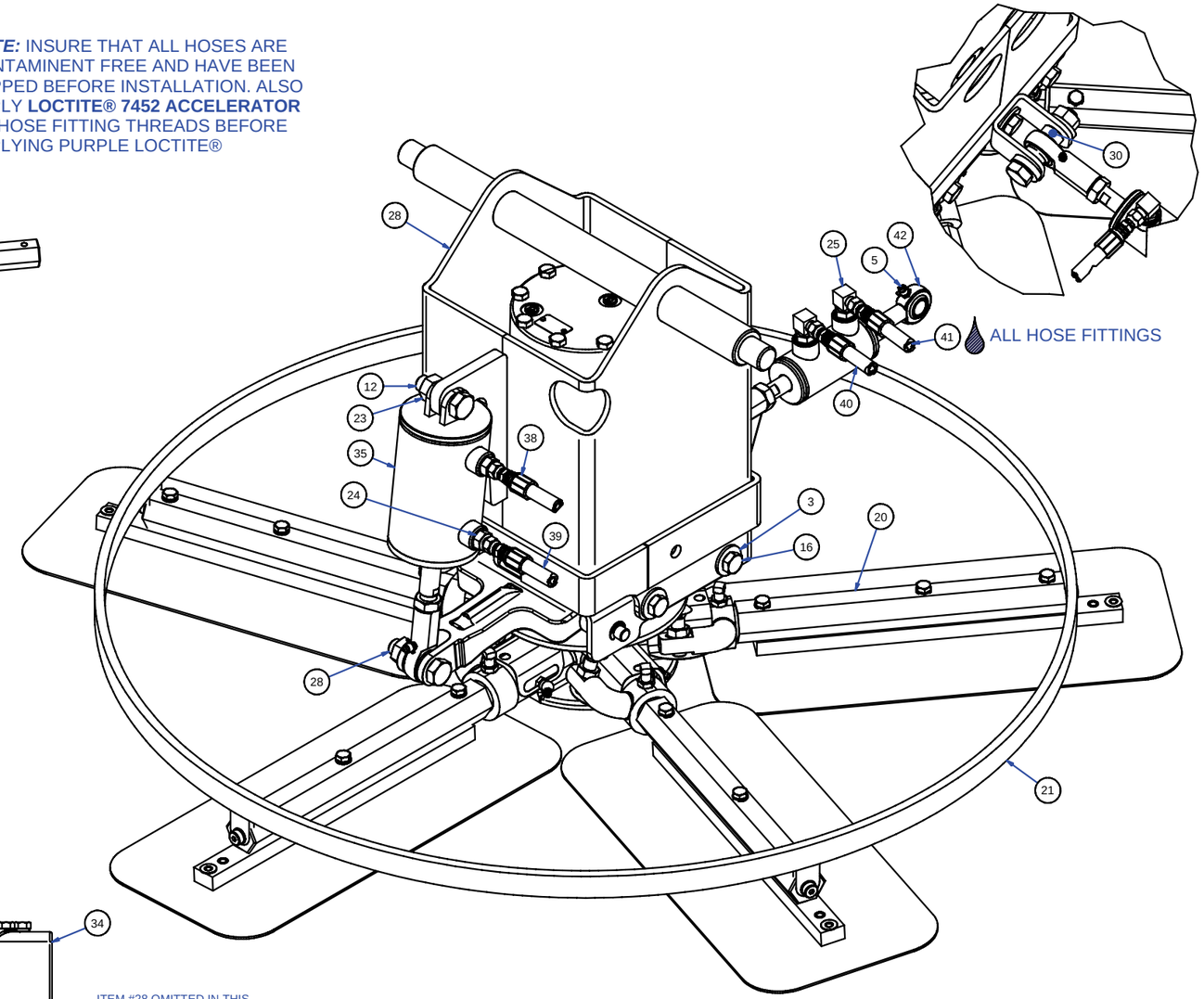

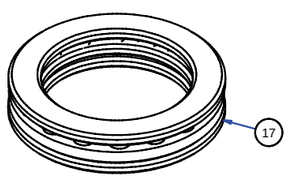

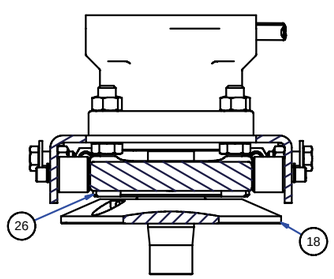

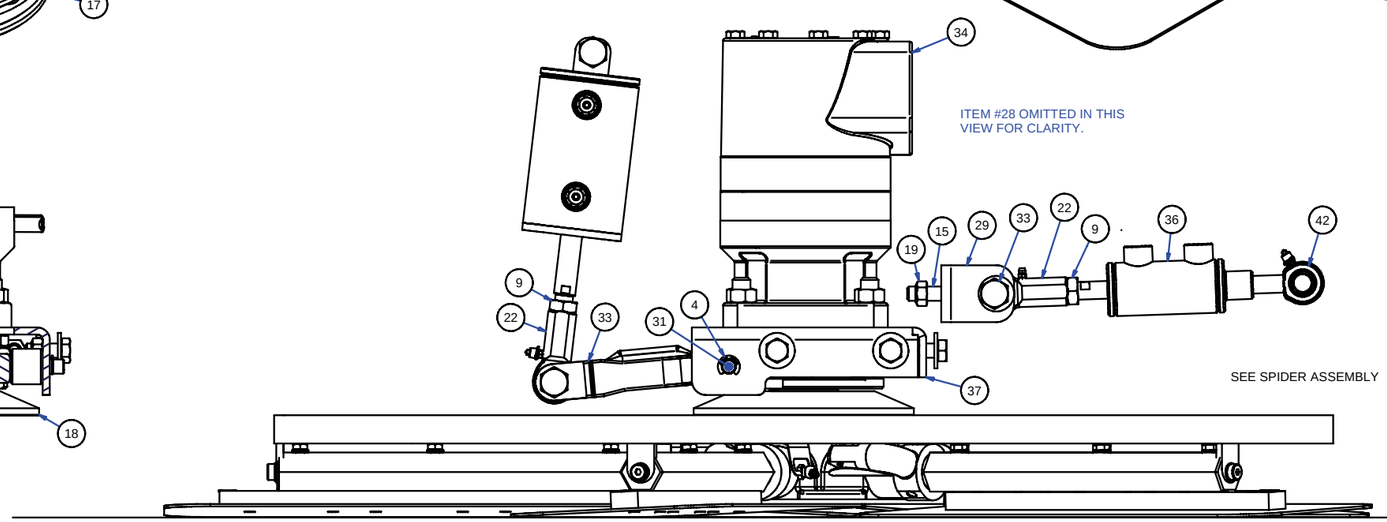

ITEM #28 OMITTED IN THIS VIEW FOR CLARITY.

SEE SPIDER ASSEMBLY

USE PURPLE LOCTITE® 545

CONFIDENTIAL: INFORMATION CONTAINED HEREIN IS THE CONFIDENTIAL PROPERTY OF ALLEN ENGINEERING CORPORATION AND MUST NOT BE DISCLOSED WITHOUT PERMISSION. PRINTS ARE SUBJECT TO RECALL AND MUST BE RELEASED UPON DEMAND.

allen ENGINEERING CORPORATION
P.O. BOX 819
PARAGOULD, AR 72451

TITLE: Right Rotor (SOM) Assembly HDX600 (X1) Riding Trowel

MATERIAL: See Parts Lists

1-PLACE DEC: 2-PLACE DEC: 3-PLACE DEC: ANLR: FRAC: MACHINE SURFACE TEXTURE

UNLESS OTHERWISE SPECIFIED DATE

DRAWN BY: AW 11/14/07 ✓

PROJECT NUMBER: PR2186 | D | PART NUMBER: 048648

CHECKED BY: | SCALE: | NEXT ASSEMBLY: 048500 | REQ'D | WEIGHT: 143.23 lbmass | UFSF: | REVISION: X

SHEET 1 OF 2

RH Motor Fitting Installation Parts List			
ITEM	PART #	DESCRIPTION	QTY
1	027969	FSTN, HHCS 5/8-18 X 2 GR 8	4
2	043269	FSTN, NUT STOVER 5/8-18	4
3	046349	FTG, F6400-6-8-O STR	1
4	046983	FTG, F6400-10-16-O STR	2
5	048655	MOTOR, HYDRAULIC RH (WHITE) X1	1
6	048687	MOUNT, MOTOR D9 WELDMENT X1	1

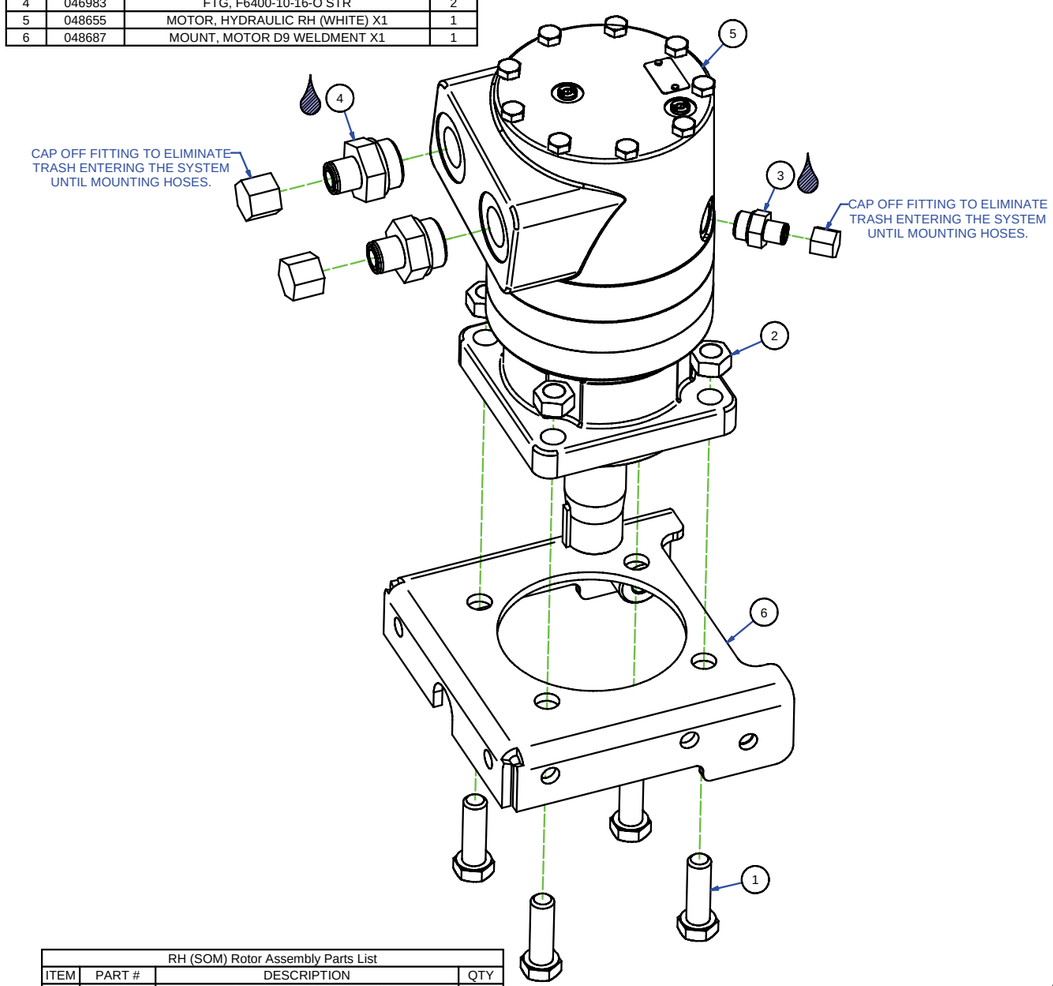

Right Motor Hose Parts List			
ITEM	PART #	DESCRIPTION	QTY
1	048688	HOSE, HS-X-1	1
2	048695	HOSE, HS-X-8	1
3	048727	HOSE, HS-X-40	1
4	048739	FTG., F6502-10-10-O	1

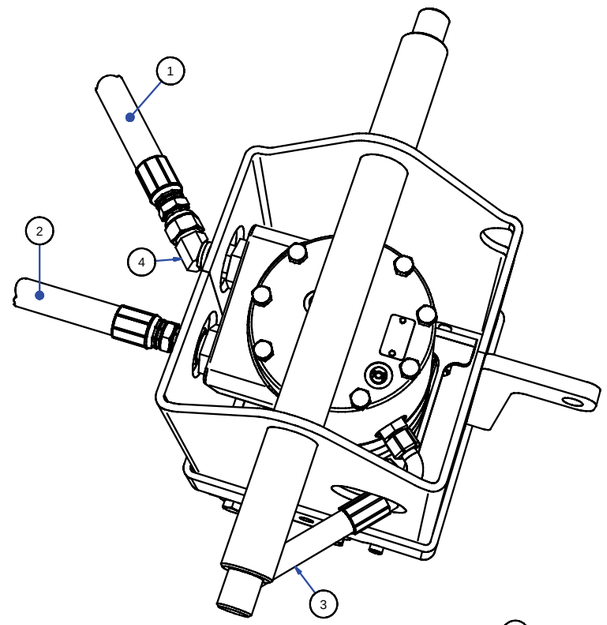

RH Rotor Breakdown Parts List			
ITEM	PART #	DESCRIPTION	QTY
1	010513	FITTING, 1/4-28 NPT STR GREASE	1
2	015693	PLUG, PLASTIC CAP EC12	1
3	020155	SCR, 1/2-13 X 1-1/2 LH SHCS	1
4	037652	WASHER, RETAINING HD	1
5	039685	BEARING, BALL THRUST EW2	1
6	039687	PLATE, SHD PRESSURE	1
7	040795	SPIDER ASSY, 1200-5 SHD RH-SOM	1
8	047187	CAP, PRESSURE PLATE	1
9	201163	FITTING, 1/8-27 PTF STR GREASE	1

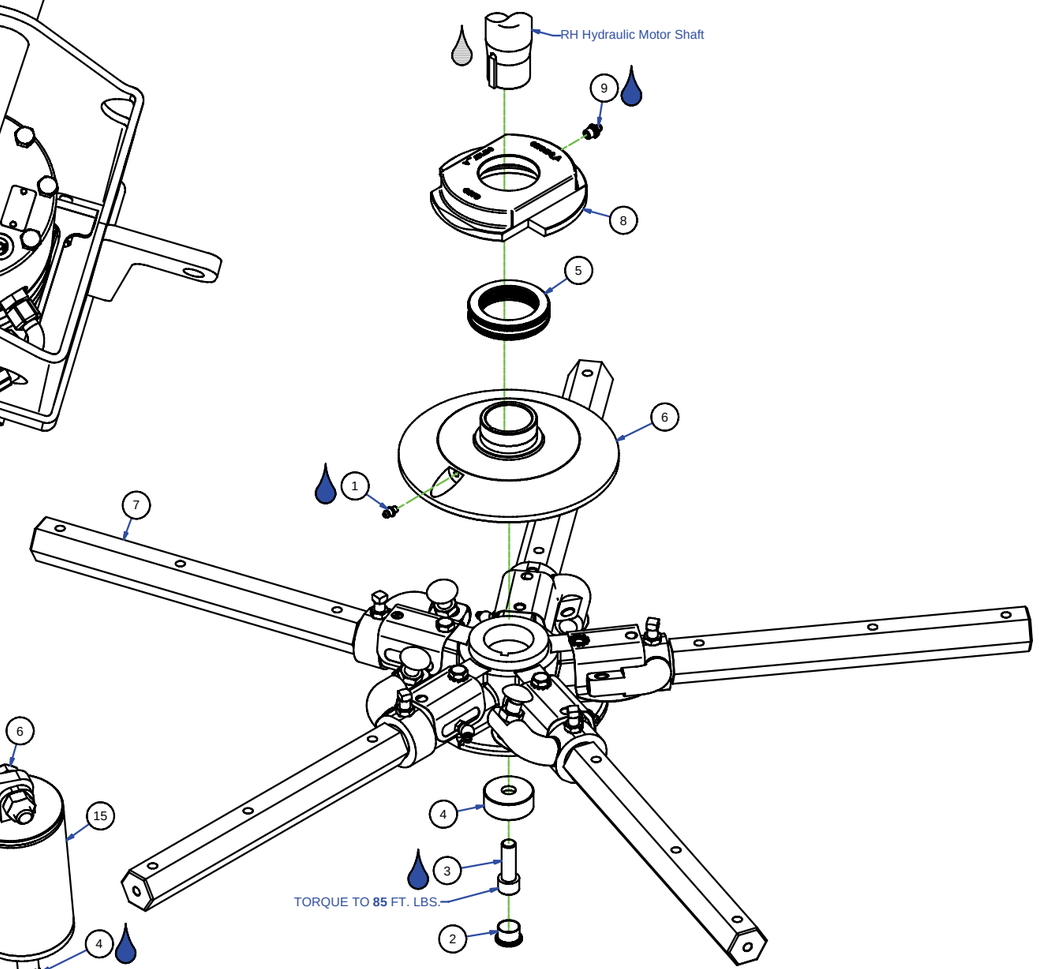

RH (SOM) Rotor Assembly Parts List			
ITEM	PART #	DESCRIPTION	QTY
1	010069	FSTN, HHCS 1/2-13 X 1-1/2	1
2	011490	FSTN, FW HARDENED 1/2	7
3	015692	CAP, Ø1/4 RED GREASE	3
4	020688	FSTN, NUT HEX JAM 5/8-18 RH	2
5	027969	FSTN, HHCS 5/8-18 X 2 GR 8	1
6	038508	FSTN, HHCS 1/2-13 X 1-1/4 GR 8	6
7	040208	FSTN, NUT STOVER LOCK 1/2-13	1
8	043125	ROD END, 5/8 FEMALE	2
9	043269	FSTN, NUT STOVER 5/8-18	3
10	047354	FSTN, HHCS 5/8-18x2-1/4 GR8	1
11	048339	FSTN, HHCS 5/8-18 x 3 GR 8	1
12	048618	PLATE, FRONT F/ RH MOTOR MOUNT X1	1
13	048624	CHANNEL, STEERING CONNECTOR X1	1
14	048627	SPACER, STEERING CYLINDER X1	2
15	048659	CYLINDER, PITCH X1	1
16	048661	CYLINDER, F/R STEERING X1	1
17	048747	ROD, END MALE 5/8 X1 MODIFIED	1

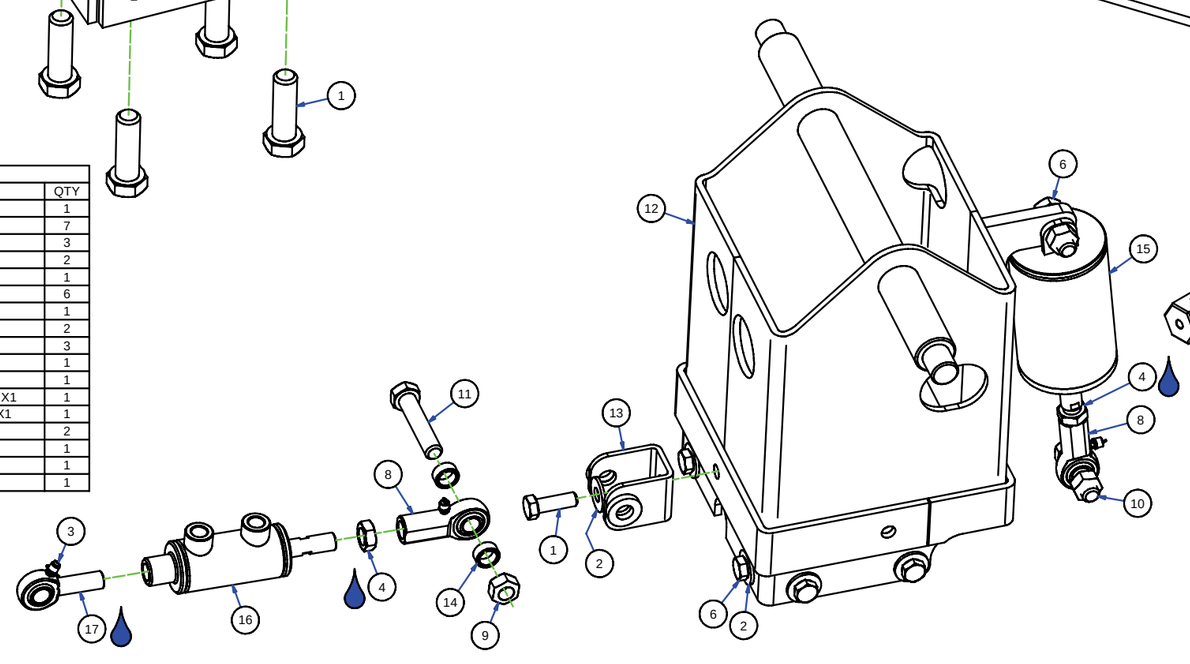

USE LOCTITE® SILVER-GRADE ANTI-SIEZE (REF. 76764)

USE PURPLE LOCTITE® 545

USE BLUE LOCTITE® 242

CONFIDENTIAL: INFORMATION CONTAINED HEREIN IS THE CONFIDENTIAL PROPERTY OF ALLEN ENGINEERING CORPORATION AND MUST NOT BE DISCLOSED WITHOUT PERMISSION. PRINTS ARE SUBJECT TO RECALL AND MUST BE RELEASED UPON DEMAND.

allen ENGINEERING CORPORATION
P.O. BOX 819
PARAGOULD, AR 72451

TITLE: RH (SOM) Rotor Assembly HDX600 (X1) Riding Trowel

MATERIAL: See Parts Lists

1-PLACE DEC: 2-PLACE DEC: 3-PLACE DEC: ANLR: FRAC: MACHINE SURFACE TEXTURE

UNLESS OTHERWISE SPECIFIED DATE

DRAWN BY: AW 11/14/07

CHECKED BY:

SCALE:

PROJECT NUMBER: PR2186

NEXT ASSEMBLY: 048500

REQ'D

WEIGHT: 15.93 lbmass

UNSP.

PART NUMBER: D 048648

REVISION: X

SHEET 2 OF 2

Hoses and Fittings Parts List			
ITEM	PART #	DESCRIPTION	QTY
1	045915	FTG, F6400-6-6-O STR	3
2	045921	FTG, F6400-8-8-O STR	3
3	045927	FTG., F6801-10-10-NWO	1
4	045929	FTG, F6801-4-4-NWO 90° ELB	2
5	045940	FTG, F6400-10-10-O STR	3
6	046361	F6602-04-04-04-0 FLARE-O FITTING	1
7	048329	FTG, F6400-4-4-O STR	9
8	048656	MANIFOLD, STEERING X1	1
9	048658	PUMP, AUXILLARY X1	1
10	048663	PUMP, PISTON X1 HYDRAULICS	1
11	048688	HOSE, HS-X-1	1
12	048689	HOSE, HS-X-2	1
13	048693	HOSE, HS-X-6	1
14	048694	HOSE, HS-X-7	1
15	048697	HOSE, HS-X-10	1
16	048698	HOSE, HS-X-11	1
17	048699	HOSE, HS-X-12	1
18	048700	HOSE, HS-X-13	1
19	048708	HOSE, HS-X-21	1
20	048709	HOSE, HS-X-22	1
21	048710	HOSE, HS-X-23	1
22	048711	HOSE, HS-X-24	1
23	048712	HOSE, HS-X-25	1
24	048713	HOSE, HS-X-26	2
25	048715	HOSE, HS-X-28	1
26	048716	HOSE, HS-X-29	1
27	048719	HOSE, HS-X-32	1
28	048722	HOSE, HS-X-35	1
29	048725	HOSE, HS-X-38	1
30	048730	COUPLING, SMK 20-9/16 TEST	3
31	048742	FTG., 6500-10-10-O-2P2	2

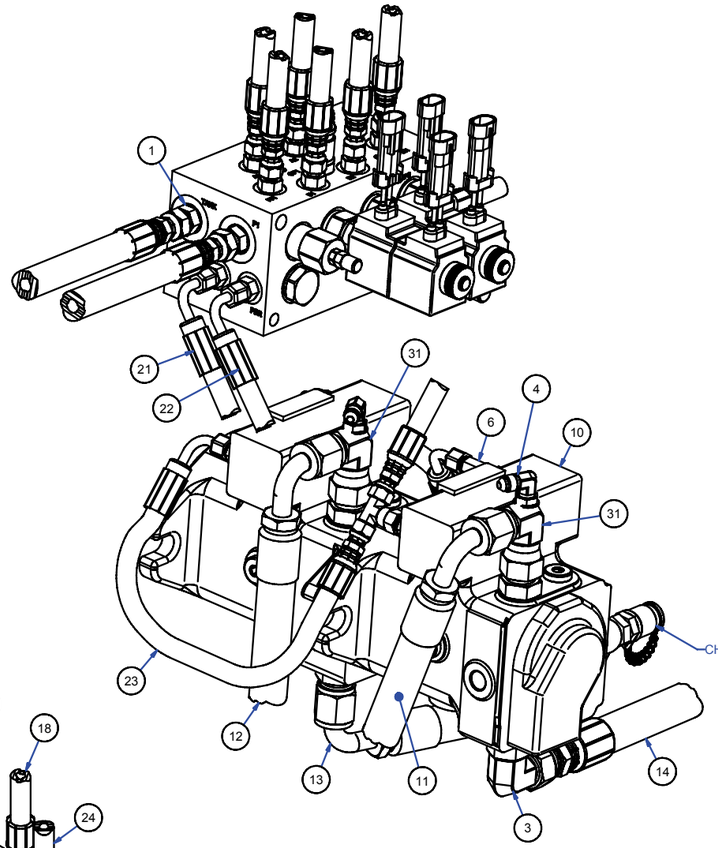

Power Unit Parts List			
ITEM	PART #	DESCRIPTION	QTY
1	010069	FSTN, HHCS 1/2-13 X 1-1/2	4
2	010091	FSTN, LW 3/8	2
3	010093	FSTN, LW 1/2	1
4	011490	FSTN, FW HARDENED 1/2	6
5	017751	FSTN, FW HARD A325 3/8	2
6	028243	CABLE, THROTTLE 52" HD	1
7	029024	FSTN, HHCS 10MM X 25MM X 1.50	4
8	029025	FSTN, HHCS 10MM X 30MM X 1.50	8
9	029032	FSTN, LW 8MM	5
10	037663	FSTN, HHCS 8MM X 1.25 X 25	8
11	038382	CLAMP, RADIATOR HOSE - 1 1/2"	2
12	040004	FSTN, 5/16-18 GR-C STOVER HEX NUT	4
13	040208	FSTN, NUT STOVER LOCK 1/2-13	2
14	043290	BRKT, RADIATOR SUPPORT	1
15	043291	ENGINE, KUBOTA 44 TURBO V1505TE2BB-1	1
16	045865	BRKT, RADIATOR OVERFLOW MOUNT	1
17	046441	COVER, FUEL PUMP	1
18	048334	FSTN, HHCS 5/16-18 x 4-1/4 GR 8	4
19	048335	ISOLATOR, RUBBER 9213K27	1
20	048574	MOUNT, REAR ENGINE X1	1
21	048632	MOUNT, FRONT ENGINE X1	2
22	048635	BRACKET, THROTTLE CABLE (ENGINE) X1	1
23	048636	BRACKET, PITCH/STEER MANIFOLD X1	1
24	048639	MUFFLER, X1	1
25	048649	RADIATOR, X1 RIDER	1
26	048650	KIT, RADIATOR MOUNT BRACKETS	1
27	048651	FAN, PUSHER F/ X1	1
28	048656	MANIFOLD, STEERING X1	1
29	048658	PUMP, AUXILLARY X1	1
30	048663	PUMP, PISTON X1 HYDRAULICS	1
31	048679	HOUSING AND COUPLING, KUBOTA 05 X1	1
32	048744	BRACKET, RAD SUPPORT X1	1
33	048797	ELBOW, MODIFIED SAMCO SPORT	1

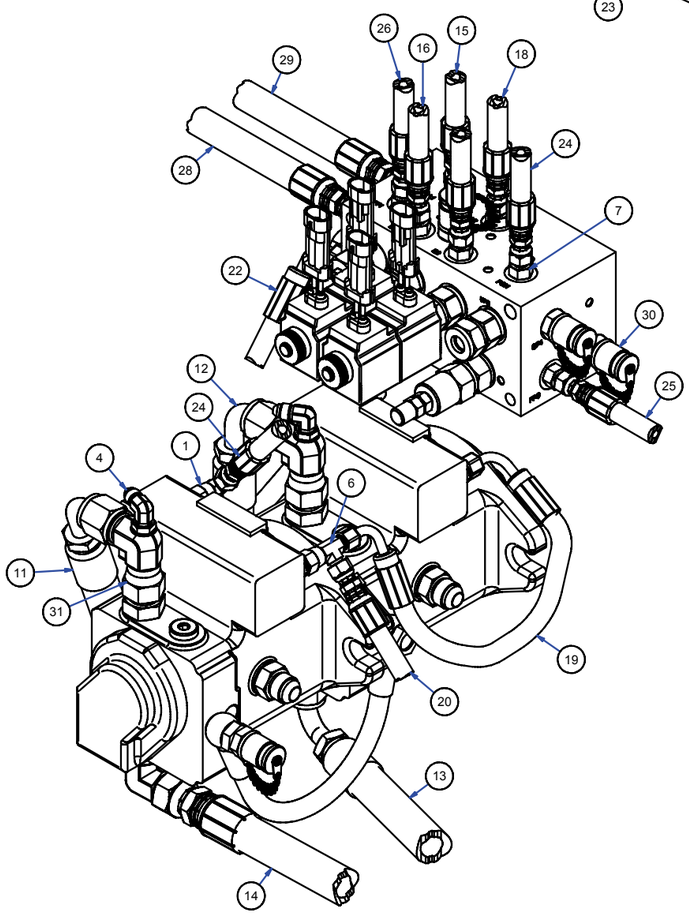

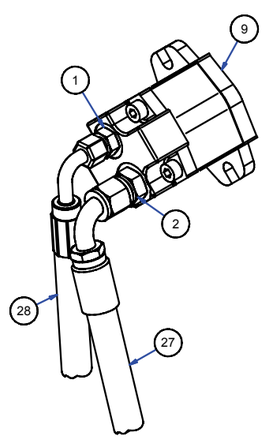

Engine Filter Kit - 048761
Oil Filter - 16271-32090
Fuel Filter - 037777
Air Filter - 048748
Inline Fuel Filter - 043920

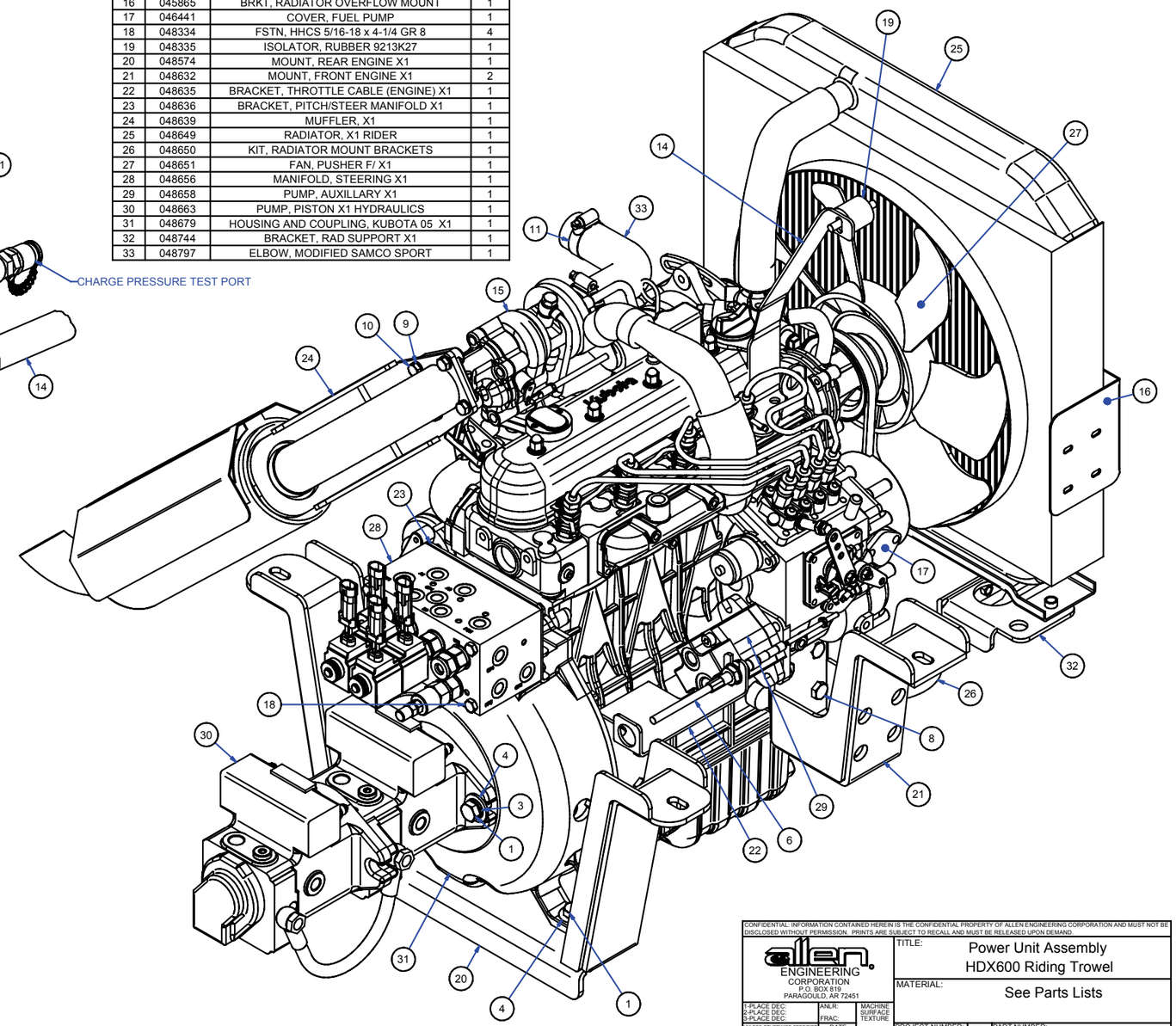

CONFIDENTIAL: INFORMATION CONTAINED HEREIN IS THE CONFIDENTIAL PROPERTY OF ALLEN ENGINEERING CORPORATION AND MUST NOT BE DISCLOSED WITHOUT PERMISSION. PRINTS ARE SUBJECT TO RECALL AND MUST BE RELEASED UPON DEMAND.

allen ENGINEERING CORPORATION
P.O. BOX 819
PARAGOULD, AR 72451

TITLE: Power Unit Assembly HDX600 Riding Trowel

MATERIAL: See Parts Lists

1-PLACE DEC: 2-PLACE DEC: 3-PLACE DEC: ANLR: FRAC: MACHINE SURFACE TEXTURE

UNLESS OTHERWISE SPECIFIED DATE

DRAWN BY: AW 10/12/07 ✓ PROJECT NUMBER: PR2186 D PART NUMBER: 048646

CHECKED BY: SCALE: NEXT ASSEMBLY: REQ'D WEIGHT: 310.77 lbmass LF/BF REVISION: X

PARTS LIST			
ITEM	PART #	DESCRIPTION	QTY
1	010133	PIN, Ø3/16 X 2 ZP STL COTTER	2
2	039094	SPACER, SP DOLLY JACK OUTSIDE	2
3	039095	WHEEL, SP DOLLY JACK	2
4	048769	DOLLY JACK WELDMENT - HDX600	1

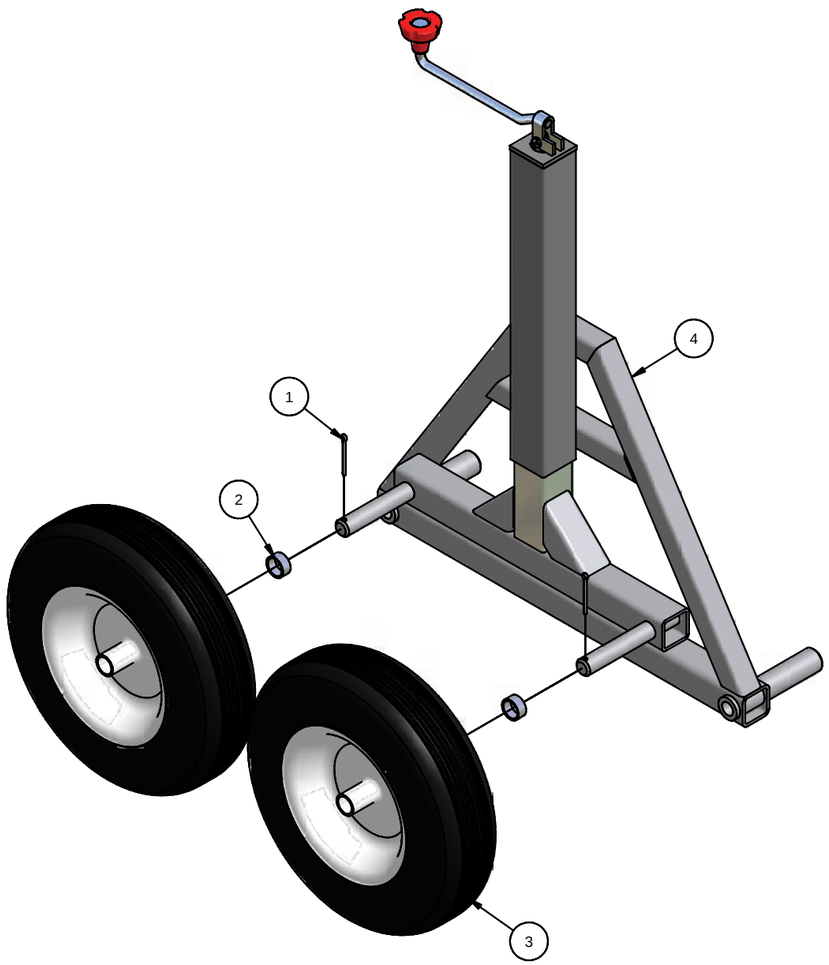

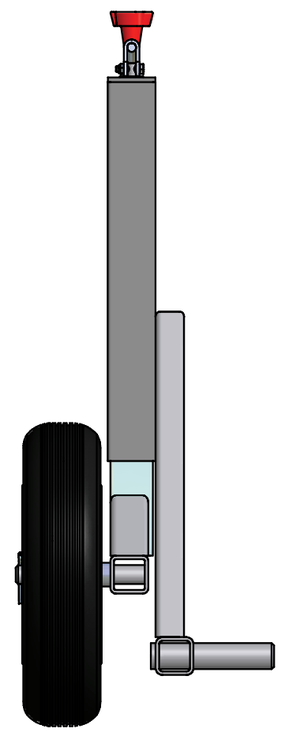

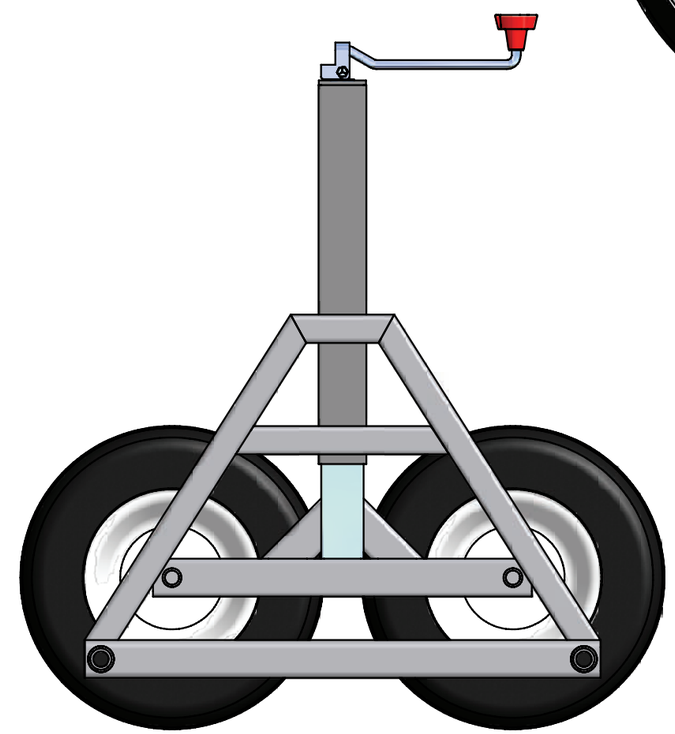

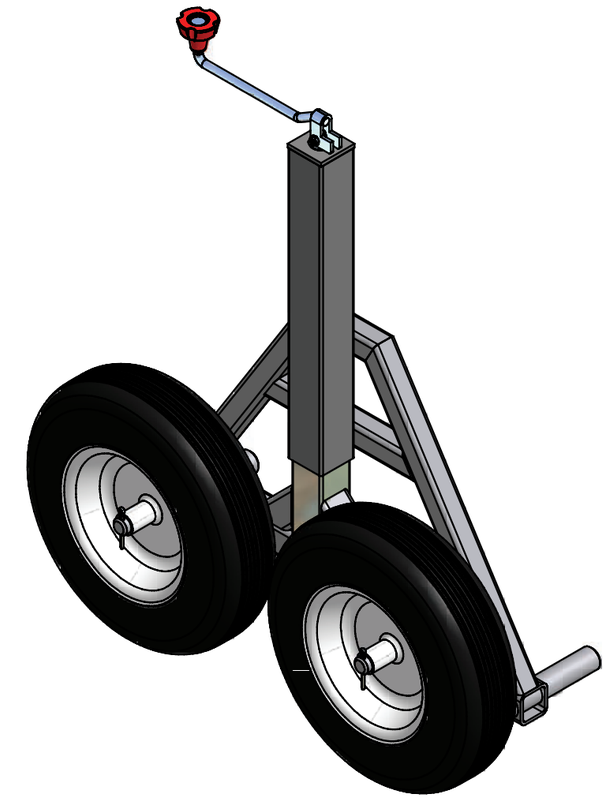

CONFIDENTIAL: INFORMATION CONTAINED HEREIN IS THE CONFIDENTIAL PROPERTY OF ALLEN ENGINEERING CORPORATION AND MUST NOT BE DISCLOSED WITHOUT PERMISSION. PRINTS ARE SUBJECT TO RECALL AND MUST BE RELEASED UPON DEMAND.

allen ENGINEERING CORPORATION
P.O. BOX 819, PARAGOULD, AR 72451

TOLERANCES, UNLESS OTHERWISE SPECIFIED:
1-PLACE DEC
2-PLACE DEC
3-PLACE DEC
ANLR
FRAC
MST Tol ✓

TITLE: ASSEMBLY, DOLLY JACK
USED ON: HDX600 RIDING TROWEL
MATERIAL: SEE
TYPE: BOM

APPROVAL	DATE	CLASS	PROJECT NUMBER	SIZE	PART NUMBER
DRAWN TDG	2-7-07		2186	D	048770

CHECKED	SCALE	NEXT ASSEMBLY	REQD	WEIGHT	LF/SF	REVISION
	.250		2			X